NZ Pryda's Specification Guide for Floor and Rafter Truss Systems

October 2026

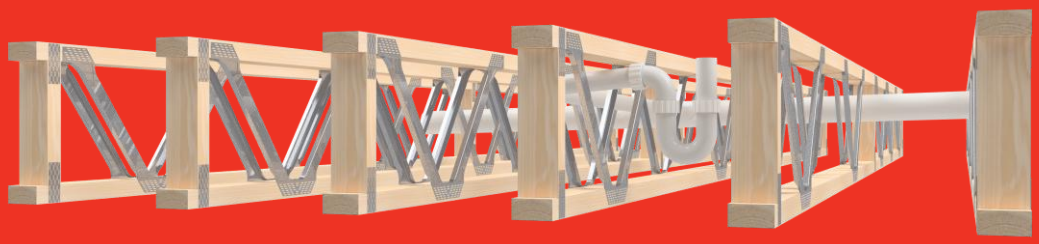

www.pryda.co.nz

Contents

INTRODUCTION 3
- Pryda Longreach Trusses 3
- SpaceJoist™ Trusses 3

FREQUENTLY ASKED QUESTIONS & ANSWERS 4

PRODUCT BENEFITS 5
- Net installed cost benefit 5
- Design cost savings 5
- Labour cost savings 5
- Design Benefits 6
- Construction Benefits 7

DESIGN CONSIDERATIONS 7
- General Information 7
- Permanent Actions (Dead Loads) 7
- Imposed Actions (Live Loads) 8

Computing Wall and Roof Loads on Floor Trusses 9
- Definitions: 9
- Loads from Internal Non-Load-Bearing Walls 9
- Dead Load (P) in kN: 9
- Loads from External Load-Bearing Walls 9
- Dead Load (P) in kN: 9

Guidance on Other Loads 10
- Spa Baths 10
- Other Heavy Loads 10

FACTORS AFFECTING FLOOR PERFORMANCE 10
- Truss Orientation 10
- Flooring Material 11
- Strongbacks 11
- Bearing 11
- Supporting Beams 11
- No Ceiling or Suspended Ceiling Underneath Trusses 11

SERVICEABILITY 12

FIRE AND SOUND RESISTANCE 12

DURABILITY 12
- Sub-Floor Ventilation 12
- Corrosion Protection 12
- Protection of Exposed Cantilever Areas 12

DETAIL END TYPES 13
- End Type 1 13
- End Type 2 13
- End Type 3 13
- End Type 4 14
- End Type 5 14
- End Type 6 15
- End Type 7 15
- End Type 8 15
- End Type 9 16
- End Type 10 16
- End Type 11 16
- End Type 12 16
- Combination End Type 17

Internal Walls 17
- Internal non-load bearing Walls - Over Floor Truss 17
- Internal braced walls - Over Floor Truss 17
- Bracing Walls Parallel to the Floor Trusses 17
- Bracing Walls Perpendicular to Floor Trusses 18
- Fitted Flooring 18

Internal Non-Load Bearing Walls - Under Floor Truss 19
- Walls Parallel 19
- Walls Perpendicular 19

Load Bearing Walls - Under Floor Truss 19
- Internal Support Types 19
- Internal Support Types Continues… 20

External Walls 20
- Fully Supported End Truss 20
- End Truss Under Gable Roof 20
- End Truss Carrying Roof Loads Over 20
- Off-Set Load-Bearing Walls 20
- Support of Concentrated Loads 21

Floor Openings 21

Beam Pocket Detail 21

Block Detail 22

Stairway header beam Parallel/Perpendicular to trusses 23

Floor Set Down 24

Ducts for Mechanical Services 24

Cantilevers 25
- Internal Cantilevers 25
- External Cantilever (Balconies) 25
- Cantilevered Support of Off-Set Walls 26
- Cantilevered Support of Off-Set Walls Continue… 27

Strongbacks 27
- Splice Detail 28
- Non-Aligned Strongbacks 28
- Strongbacks Not Required 28

STABILITY 28
- General 28
- Wind Bracing 28
- Lateral Bracing of Floor Trusses Chords 29

End Bracing 29
- Method 1: Strap brace wrapped round wall plate (preferred method) 29
- Method 2: Strap brace nailed to side of wall plate 29

Bracing Walls Supported by Cantilever 30
- Fixings at Supports 30

Face Fixing of Floor Trusses Domestic Floors 30

Floor Truss Framing Brackets and Fixings 31

INSTALLATION 31
- Construction Loads 31

PRYDA RAFTER TRUSS SYSTEM 32
- INTRODUCTION 32
- Purlin Trusses 32
- Rafter Trusses 32
- PRODUCT BENEFITS 32

DESIGN CONSIDERATIONS 32
- Design Loads 32
- Permanent Actions (Dead Loads) 32
- Imposed Actions (Live Loads) 32
- Wind Actions (Wind Loads) 33
- Ducts for Mechanical Services 33

FACTORS AFFECTING PERFORMANCE 33
- Deflection Limits 33
- Special Loading Conditions 33

STABILITY 33
- Top Chord Bracing 33
- Bottom Chord Bracing 34
- Cantilever Bracing 34
- Fixing to Supports 34

APPENDICES 35

Appendix A: Producer Statement 35

Appendix B: Typical Layout 35

Appendix C: Detailers Guide / Check List 36

Appendix D: Design Request Form 37

INTRODUCTION

Pryda Floor Truss Systems are a complete structural system for timber floors made up of flooring material, floor trusses, Strongbacks, connections and bracing. They have been proven over many years and provide occupiers with floors that have an excellent and predictably reliable performance. The timber for these trusses is on flat, which provides a stable platform during installation and minimizes the overall depth while maximising the internal space for running services. All trusses use commonly available timber and most floor trusses in New Zealand are made from 70mm or 90mm dry timber. There are two different types of web systems for these trusses. Both have timber chords, but Pryda Longreach uses all-timber webs, while SpaceJoist™ uses metal webs for the diagonals and timber webs for the verticals. Both systems of Pryda floor trusses are generally made to order by licensed fabricators. While there are standard end details that allow trusses to be trimmed on site, this practice is not common. This is not only because all trusses are designed for an exact span for economic reasons, but the interaction between the true span of the trusses and the flooring should be considered for proper dynamic performance assessment.

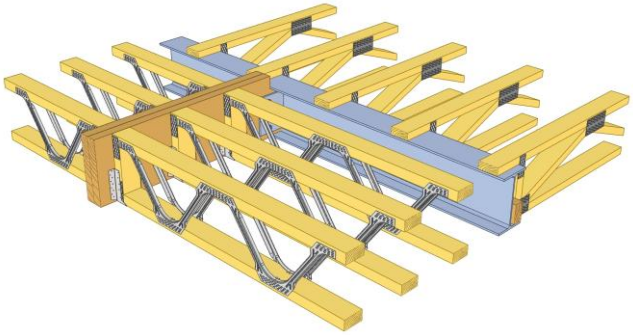

Pryda Longreach Trusses

Longreach trusses are a premium performance product using nail plated, all-timber components of any depth, but typically 360mm deep for residential floors and 400mm deep for commercial floors. The actual depth dimensions are in nominal size steps, or may be individually specified as required for the project. Pryda Longreach can be designed for all common floor loads, including commercial loadings up to 5 kPa or point loads up to 6.7kN. Longreach trusses are slightly heavier than SpaceJoist™ trusses and being all-timber generally have a stiffer performance as they can dissipate floor vibrations very well, and the nail-plates connecting the webs and chords are quite substantial.

PRYDA LONGREACH TRUSS

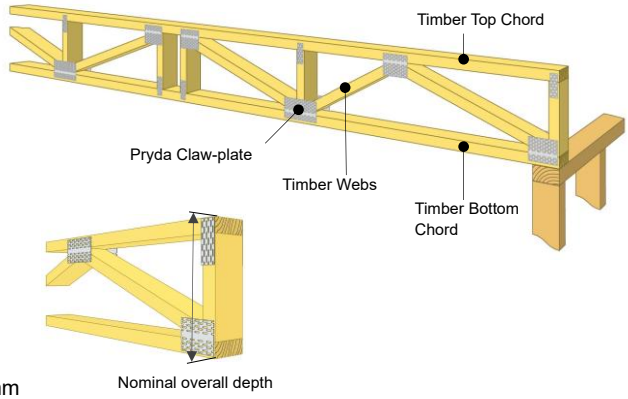

SpaceJoist™ Trusses

SpaceJoist™ trusses have metal diagonal webs for light weight and economy. SpaceJoist™ come in nominal overall depth of 250mm, 300mm, 360mm and 400mm. The open metal systems have more clearance room to accommodate the plumbing than with timber webs. In some Instances, a few diagonal metal webs may have to be replaced by timber webs in these trusses, as load or geometry considerations dictate. Webs may be on both faces of the truss or just on alternate faces, and in the latter case this allows for the webs to overlap. Both metal web system uses alphanumeric references to identify their unique attributes.

SPACEJOIST™ TRUSS

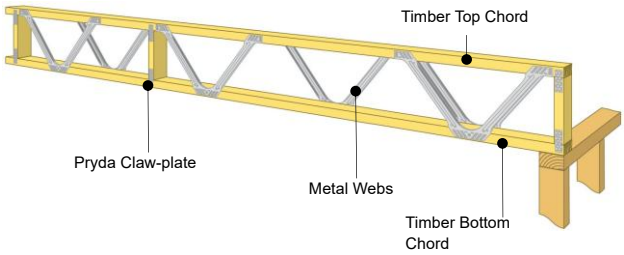

Identifiers: Pryda SpaceJoist™
Chord thickness can be either 35mm or 45mm. There are two distinct PW webs available, PW25 with 260mm nominal overall height using 45mm chords. PW30 with 310mm overall nominal height using 45mm chords. There are two distinct SJ webs available, SJ36045 with 360mm overall height using 45mm chords. SJ40045 with 400mm overall height using 45mm chords.

The actual depth dimensions are in nominal size steps according to the metal web used, and if required, the specific depth should be obtained from the Pryda licensed fabricator. Pryda Span is manufactured using light gauge metal webs and are lighter than Longreach and can be very cost-effective alternative. The nail plates and metal webs are made to exacting standards from G300 grade steel with a minimum of Z275 galvanised coating.

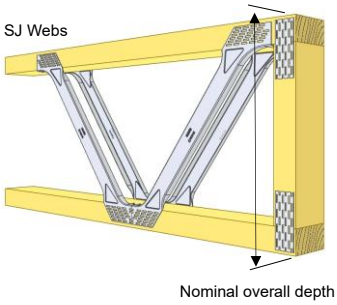

Pryda Span Floor Truss System have expanded and will be part of the improved Pryda SpaceJoist™ Floor Truss System.

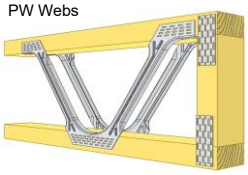

FREQUENTLY ASKED QUESTIONS & ANSWERS

Q. What is the market point of difference for this product?

A. Pryda floor and rafter trusses are **customised** for each job, including required stiffness, depth, timber grades and span. It will be computer designed for optimal performance, cost and installation efficiency while minimising waste.

The **open web design** ensures services are easily installed. There is no drilling or notching, saving time on site.

Extra-long spans and large cantilevers can be provided, with the ability to support high loads. Spans up to 7.1m at 400mm depth can be achieved.

Significant **design improvement with minimal cost increases** can be achieved with the Pryda Longreach (timber web) truss, by simply increasing its depth.

There is a large selection of **end support types** for quick and easy installation. Pryda floor and rafter trusses arrive on site manufactured to size and ready to install, eliminating the need to trim on site.

Set down or recess sections can be designed and prefabricated into the floor truss. This results in significant labour savings when it comes to laying floor coverings on balconies or fixtures and tiles in the bathroom.

Q. What is it made from and is it "green"?

A. Pryda produces two types of floor and rafter truss products, Pryda Longreach, which contains timber webs joined with steel nail plates and SpaceJoist™ which is manufactured with metal webs. Both products are manufactured using timber top and bottom chords.

Timber frame buildings are now being designed to meet low energy construction standards as timber have a high standard of **thermal comfort** while consuming minimal non-renewable energy.

A principal objective for responsible design of environmentally friendly timber construction is to minimise life cycle energy consumption. Timber in lightweight construction is a **superior material** compared to manufactured material such as steel, concrete and masonry as it uses a comparatively small amount of non-renewable energy in its extraction and manufacture.

Timber maximises the efficiency of insulation materials because wood never gets cold or dissipates heat, therefore less energy is required to maintain warmth in a building, and the less energy used, the less damage to the environment.

Today timber is available with a variety of popular and very cost effective treatments that can make it an extremely durable and termite resistant building material.

The metal webs used in SpaceJoist™ and Pryda Claw® Nailplates used for joining of timber in the construction are manufactured from G300 grade steel with Z275 galvanised coating.

Q. Is it expensive?

A. If you are comparing flooring systems' cost on a per lineal metre basis, there are less expensive alternatives. However, you need to consider the **"net installed cost"**. Pryda floor and rafter trusses can provide both installation and design savings.

As stated earlier, each job is **customised** to ensure the most cost and design efficient outcome. In addition, significant design improvements can be made by simply increasing its depth at minimal cost increases.

Floor trusses can **span further** than alternative flooring systems, which may result in savings in additional support structures. E.g. Internal load-bearing walls, steel beams.

Q. Is it easy and quick to install?

A. On site, the Pryda floor and rafter truss products are generally **quicker to install** than other types of joists or rafters. As the truss **end support connections** are all prefabricated there is no cutting or complicated fitting required, which will speed-up installation and minimise mistakes. There are multiple end support type options available.

The **open-web** design of the product eliminates potentially damaging practices such as cutting out sections for services or drilling large holes. This ease of access for installing services including plumbing, heating ducts, electrical wiring and electronic data cabling is a major benefit to builders.

Q. What accreditation does the product have?

A. **Pryda Build software** is used by licensed Pryda truss and frame fabricators to produce designs and manufacturing specifications for Pryda floor trusses.

Pryda Build has been **independently assessed** by professional consulting structural engineers for compliance with the National Construction Code NCC 2022, and its referenced documents. Pryda has also demonstrated compliance with the requirements set out in the ABCB Structural software protocol 2011.2.

All licensed Pryda fabricators are trained by Pryda in the use of Pryda Build. Users are issued with a Certificate of Training if they have demonstrated an acceptable understanding of the features presented during the course. Evidence of this training to any fabricator using Pryda Build may be obtained on request.

In addition, the following reports are available and they can each be produced by a licensed Pryda fabricator:

- **Producer Statement Report** – a statement of design compliance for the whole job with overall and nominal design criteria, and BCA referenced documents.
- **Plan Layout** - showing the roof and all trusses laid out; all bracing (input by users); special notes for installation; all truss-to-truss connections.
- **Detail Sheet** – a drawing of each truss with all relevant design parameters associated with that particular truss.
- **Design Report (summary)** – all general loads; all applied distributed loads; truss serviceability displacements for major loads; support reactions; critical member timber designs details; bearing requirements; and nail plate design details at critical joints.
- **Design Report (detailed)** – as per the summary report, plus the results of the analysis for the 4 most critical combined load cases; all timber member designs; all nail plate joint designs.

Q. Where can I get it?

A. Pryda floor trusses are available through licensed Pryda truss and frame fabricators. You can locate your preferred fabricator via our website, **www.pryda.co.nz** or by calling 1800 810 741.

PRODUCT BENEFITS

Pryda Floor Truss Systems offer many benefits to the designer, the builder and the building owner in providing a reliable high-performance system for both domestic and light commercial construction. The use of the Pryda Floor Truss System results in a very cost-effective, high-quality product that is sufficiently flexible to accommodate the most complex of building requirements.

Net installed cost benefit

The Pryda fully engineered open-web timber floor truss systems with timber webs (Pryda Longreach) or metal webs (SpaceJoist™) have many advantages that result in a lower net installed cost compared to other systems that are available. In some instances, there may be a material cost increase by using Pryda floor trusses over alternative flooring systems. However, when it comes to installing the product Pryda floor trusses can provide significant labour savings. In addition, floor trusses have some considerable design advantages that could result in reducing the need for a large amount of costly structural support construction. E.g. Long spans may reduce the need for internal load-bearing walls.
Go to the Pryda website www.pryda.com.au to view the St. Clair Park Village case study. There was a 6% increase in material costs by using Pryda Longreach floor trusses over solid joists. Framing time was reduced by 2 weeks, and the labour saving was 2.5 times larger than the material cost increase. Examples of these advantages are as follows and should be considered in the assessment of the overall cost of the flooring system:

Design cost savings

- **Cost Efficient Design**.
  Each floor truss is customised for the job, including required stiffness, depth, timber grades and span. It will be computer designed for optimal performance and cost and installation efficiency while minimizing waste.
- **Significant Design Improvement with Minimal Cost Increases**.
  Span capacity and stiffness can be significantly enhanced by simply increasing the depth of the Pryda Longreach floor truss. Due to the timber web design of the floor trusses, the increase in depth is at a minimal cost.
- **Greater Design Flexibility**.
  Extra-long spans and large cantilevers can be provided, with the ability to support high loads. Spans up to 7.1 metres at 400mm depth using MGS10. This results in the following design and cost benefits:
  - The long spans can potentially eliminate the need for some interior support walls and beams, giving more scope to architects and designers thus reducing the cost of the support structure.
  - Large spans within restricted height applications can be achieved with Pryda floor trusses. In some cases, the use of floor trusses may eliminate the need to use costly steel beams.
  - Ideal for sloping blocks. In some instances, floor trusses could be used to eliminate or reduce the excavation costs associated with sloping blocks.

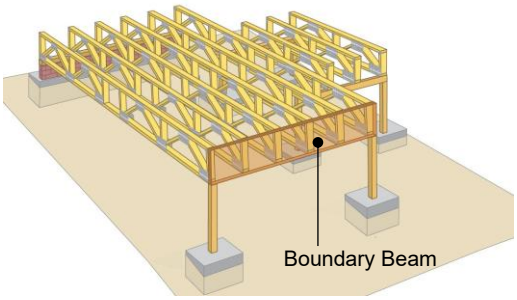

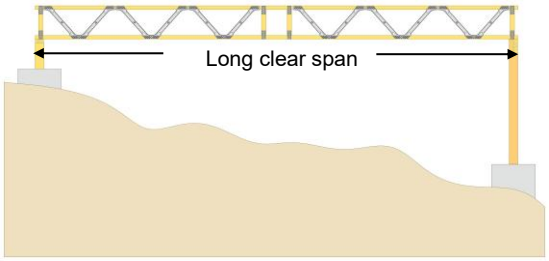

Labour cost savings

- **Set Down or Recess sections**. The ability to design and manufacture set down sections into the floor trusses provides significant labour savings in the following situations:
- In cantilever and balcony areas where the provision of adequate flashing and accommodation of different floor covering material thicknesses is critical.
- Bathrooms, toilets and other wet areas may also require the floor surface to be set down. This will provide significant labour savings when other trades start installing bathroom fixtures, fittings and tiling.

Example of set down section for a balcony

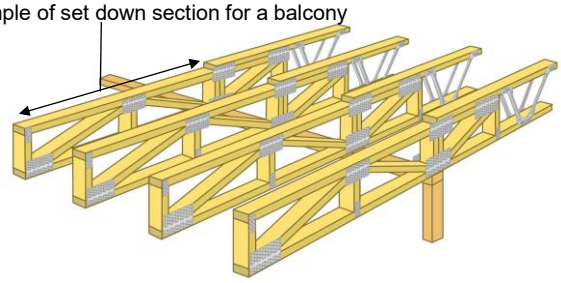

Example of an internal set down area

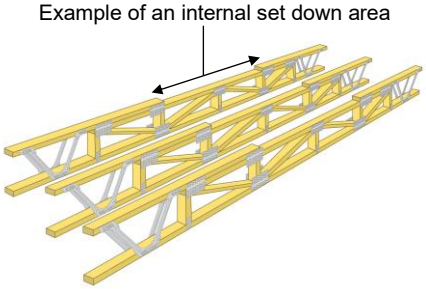

- **No Cutting, Drilling or Notching**. The open webs and voids designed to allow easy fixing of electrical, plumbing, ducts and energy services. There is no need for drilling or notching, saving time on site.

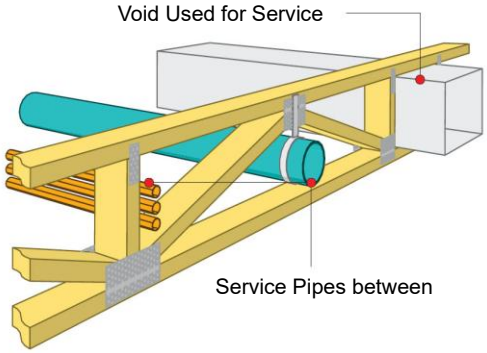

- **Quick Installation**. A large selection of end support types for quick and easy installation. Pryda floor trusses arrive on site manufactured to size and ready to install, eliminating the need to trim on site. There is no material or labour wastage. Pryda floor trusses are designed and manufactured with end types for fast, secure fixing to steel, concrete, masonry or timber. Refer to End Details section or the Pryda website www.pryda.com.au to view the available options.

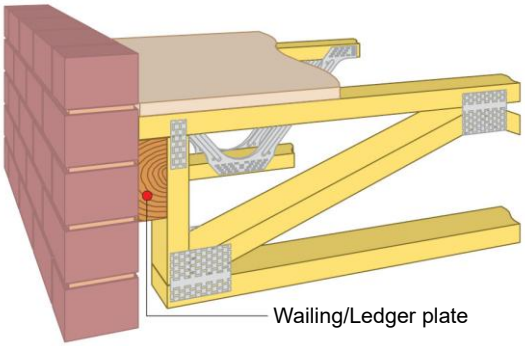

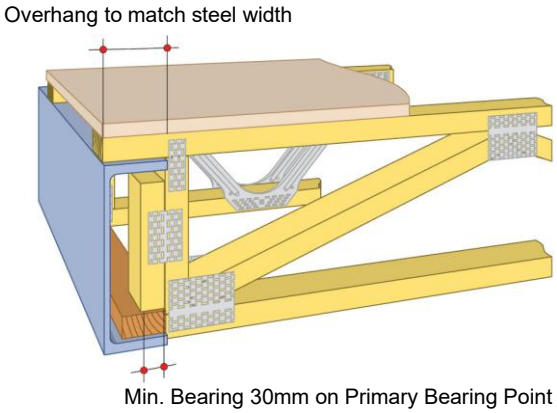

- In addition to providing net installed cost savings there are numerous design and construction benefits of Pryda floor truss systems, they are as follows:

Design Benefits

- **Assured Performance**. Pryda floor and rafter truss systems have been used with outstanding results for over many decades by designers and builders.
- **Design Versatility**. The long span capacity - up to 8 metres or more - offers functional design freedom and can eliminate the need for interior support walls and beams.
- **Depths to Suit**. Wide range of standard depths available – from 200 to 600mm or can be manufactured specifically for a particular project.
- **Limited Space**. Designs can accommodate large spans in restricted height applications.
- **Cost Effective**. Timber grade in chords is selected to suit the design requirements of each individual project to provide the most cost-effective system.
- **Larger Spans at Low Cost**. With all-timber trusses (Pryda Longreach) the span capacity increases significantly as the truss depth increases - at little extra cost.
- **Commercial Applications**. Pryda floor trusses not only accommodate domestic loads but may also be designed for light commercial applications including offices, schools, hospitals and function areas.
- **Designed to Order**. Stiffness required, depth, timber grades and sizes can be varied to suit any individual job requirements. Computer designed for optimal performance efficiency and lowest material cost.
- **Wide Range of End Supports**. Standard end support types suit structural connections to steel, concrete, masonry or timber.
- **Extra Stiffness in Floors**. Stiffer than other floor systems with established dynamic limits to ensure rigidity and to overcome springiness and bounce. Designed to provide a floor that feels and acts “rock-solid”.
- **Accommodates Large Ducts**. Large rectangular ducts to 600mm wide can fit within the standard design and special duct routing within rows of trusses can be incorporated.
- **Dimensionally Stable**. Fully kiln-dried timber ensures stability, free from movement due to shrinkage.
- **Efficient Use of Timber**. More efficient use of natural resources than solid timber joists.
- **CAD Compatible**. Standard data and design details available on CAD.

Construction Benefits

- **Easy to Install**. Truss end support connections are premanufactured to fit. No cutting or notching will minimise the possibility of mistakes.
- **Ease of Access**. Flexible ducting, electrical wiring and electronic data cabling can be easily run between the truss webs.
- **No Cutting Holes**. Simplifies the work of following trades. Plumbing, ventilation ducts and conduits can be simply attached to the webs or chords without any cutting or drilling holes.
- **Faster Installation**. Quicker installation times provide the opportunity to reduce construction costs.
- **Stable Platform During Construction**. The wide chord flanges are more stable for tradesmen moving around the elevated areas on a job.
- **Lightweight**. Trusses are much lighter than solid timber sections. Much easier to handle and lift on site.
- **Floor Set Down Feature**. A section of Pryda floor trusses (Longreach/Pryda span/SpaceJoist™)) can be manufactured with a reduced depth to accommodate tiled wet areas and other floor coverings in bathrooms and on balconies.
- **Consistent Depth**. Pryda floor trusses can be manufactured to the same depth for the entire project to eliminate uneven ceiling levels at little extra cost - regardless of the variations in spans.
- **Robust Construction**. More robust than other prefabricated systems, and more able to resist the effects of mishandling. SpaceJoist™ metal web design has a patented deep V profile incorporating stiffeners for improved performance and resistance to damage during handling on site.

DESIGN CONSIDERATIONS

General Information

Floor trusses are to be designed for a combination of permanent actions (dead loads) and imposed actions (live loads) in accordance with the loading standards referenced in the Building Code of Australia (BCA).

Permanent Actions (Dead Loads)

Permanent actions are defined in AS/NZS1170.1:2002 to include, but not limited to, actions of the following items:

I. *Weight of floor systems:* This includes flooring material, floor coverings, self-weight of supporting members etc. e.g, Tiled floors apply larger loads than carpeted floors.
II. *Weight of walls:* e.g. external load-bearing walls or heavy internal tiled or acoustic walls need special attention.
III. *Weight of roof:* any loads transferred down from the roof to the floor should be considered.
IV. *Fixtures and fittings:* spa baths, kitchen benchtops etc. can influence design.
V. *Storage:* loads from bookshelves, billiard tables etc. which are likely to be in place for long periods should be treated as permanent in nature.

Table 1 – Typical Floor Construction Weights

Mass of Floor (kg/m²)	Description of Floor Constructions
25	Standard floor up to 22mm particleboard with carpet or vinyl floor covering and no ceiling
40	Standard floor up to 22mm particleboard with carpet or vinyl floor covering with 10mm particleboard ceiling (Typical mass given in AS1684)
50	18mm fibre cement sheet (wet areas) with lightweight floor covering with 10mm plasterboard ceiling
75	75mm Hebel floor with carpet or vinyl floor covering with 10mm plasterboard ceiling
85	18mm fibre cement sheet (wet areas) + ceramic tiles on adhesive with 10mm plasterboard ceiling
110	18mm fibrecement sheet (wet areas) + ceramic tiles on 40mm mortar bed with 10mm plasterboard ceiling

Table 2 – Typical Wall Construction Weights

Mass of Wall (kg/m²)	Description of Wall Constructions
15	As used in NZS1170 – typical for external walls with cladding on one side only
25	Typical lightweight internal walls with 10mm plasterboard on each side or a combination of plasterboard and 6mm fibre-cement sheet
45	Heavyweight internal soundproof walls with 2 layers of 13mm Soundcheck plasterboard on each face
60	Heavyweight internal soundproof walls with 2 layers of 16mm Fyrchek plasterboard on each face
70	Heavyweight external walls with Hebel Power Panel on external face and 10mm plasterboard on internal

Table 3 – Typical Roof Construction Weights

Mass of Roof (kg/m²)	Description of Roof Constructions
10	Steel sheet roofing 0.48mm thick with battens
20	Metal sheet tiles or 0.55mm thick steel sheet roofing. 12mm softwood ceiling lining, sarking and lightweight insulation
30	Steel sheet roofing 0.75mm thick. 13mm plasterboard ceiling, roof and ceiling battens, sarking and lightweight insulation
40	Steel sheet roofing 0.75mm thick, high-density fibre-cement ceiling, roof and ceiling battens, sarking and lightweight insulation
60	Terracotta or concrete tiles and roof battens with no ceiling
75	Terracotta or concrete tiles, roofing and ceiling battens, 10mm plasterboard ceiling, sarking and insulation
90	Terracotta or concrete tiles, roofing and ceiling battens, 19mm hardwood ceiling, sarking and insulation

Imposed Actions (Live Loads)

Imposed actions are the transient loads that are placed on the floor due to people, furniture etc. These loads are an estimation of the temporary occupation and the associated use of the space that the floor supports. Typically, trusses are designed for a uniformly distributed live load and a 'moving' concentrated load. These two loads are considered separately – whichever produces the most adverse effect.

Table 4 - Typical Imposed Actions on Houses

Load Type	General areas	Balcony
Uniformly distributed load	1.5 kPa	2.0 kPa
Concentrated point load	1.8kN	1.8kN

Note to Engineers*:* If the floor trusses are intended to carry loads other than residential design loads, then the relevant information should be passed on to the truss manufacturer prior to the design process. Read AS/NZS1170.1: 2002 for complete details of imposed actions. Below is an extract from this code:

Table 5 – Typical Imposed Actions on Commercial Buildings

Floor Application	Uniformally Distributed Load kPa	Point Load kN
Assembly areas	3.0 - 5.0	2.7 - 3.6
Public corridors and spaces	4.0 - 5.0	4.5
Stages	7.5	4.5
Offices (General use)	3.0	2.7
General storage	2.4/m height	7.0
Drill rooms and halls	5.0	9.0

Computing Wall and Roof Loads on Floor Trusses

This section provides guidance on how to determine additional loads applied on floor trusses from internal and load-bearing external walls. To avoid costly errors, the project design Engineer should nominate any permanent action (dead loads) to satisfy the project specific design requirements.

Definitions:

Mr = Mass of Roof (kg/m2) – Refer Table 3
Mw = Mass of Wall (kg/m2) – Refer Table 2
RLW = Roof Load Width (m)
FLW = Floor Load Width (m)
Hw = Wall Height (m)
Sp = Point Load Spacing (m)

Note: The floor load width (FLW) is usually taken as the spacing of floor trusses. However, if the spacing is irregular, then FLW is the sum of half-spacings from the truss in consideration to the respective adjacent trusses.

Loads from Internal Non-Load-Bearing Walls

A knowledge of the floor load width (FLW), the mass of wall (refer Table 2) and the wall height is required to determine the point load applied on the floor truss.

Dead Load (P) in kN:

$$P = (Mw * Hw * FLW) * 9.81$$

$$= \text{kg} \times 9.81$$

$$= \text{N}$$

Covert mass (kg) to Newton force, multiply the mass in kg by standard gravity (9.81 m/s²)

$$= \frac{\text{N}}{1000}$$

Covert newton to Kilonewton

$$= \text{kN}$$

$$P = \frac{(Mw * Hw * FLW)}{100}$$

Simplified equation Perpendicular to floor

$$P = \frac{(Mw * Hw * Sp)}{100}$$

Simplified equation Parallel to floor

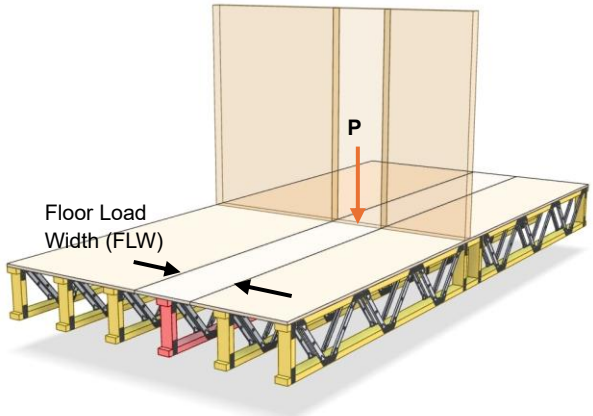

Internal non-load-bearing wall load perpendicular on floor truss

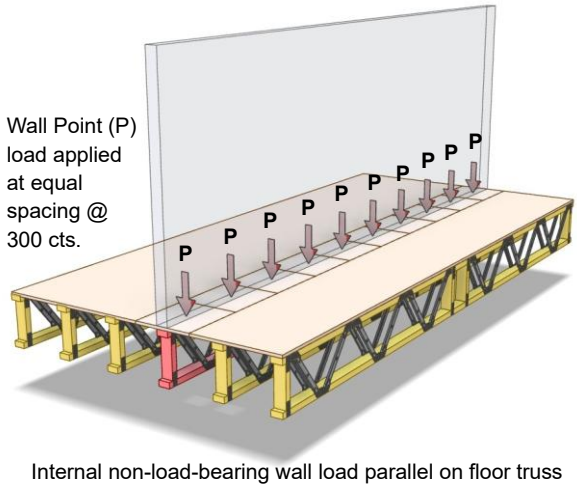

Internal non-load-bearing wall load parallel on floor truss

Loads from External Load-Bearing Walls

External load-bearing walls supported by floor trusses are becoming increasingly common in today's designs. The ability for floor trusses to carry load-bearing walls has enabled designers to delete steel beams from the floor frame and help achieve economical designs. In addition to the FLW, wall weight and wall height, the roof load width (RLW) and the roof mass are also required to determine the point load on the floor truss. The RLW is computed similar to AS1684, using half truss span + overhang and dividing the sum by the cosine of the roof pitch.

Dead Load (P) in kN:

Roof Load + Wall Load x Floor Load

$$P = \frac{(\text{Mr} * \text{RLW}) + (\text{Mw} * \text{Hw} * \text{FLW})}{100}$$

Simplified Equation, conversion kilogram force to kilonewton

Any concentrated wall studs (supporting girder truss) or jamb studs should be treated separately, and specially designed floor trusses may be provided at these specific locations.

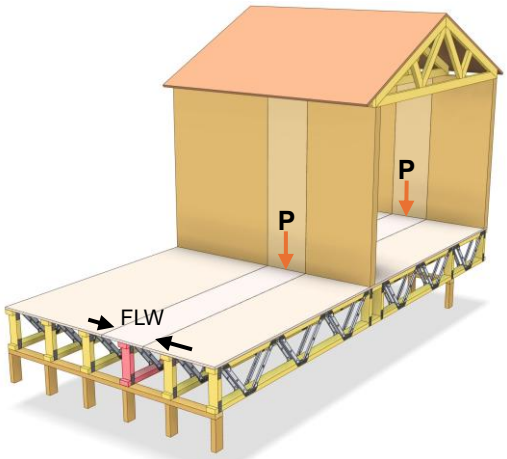

External load bearing wall loads perpendicular on floor truss

Guidance on Other Loads

Spa Baths

Modern spas are generally made from acrylic or metal and come in different shapes having light-weight shells. However, spas that are made from cast iron, stone etc and those needing grout bedding are significantly heavier and therefore require special attention. Licensed Pryda fabricators have the facility to apply a load area on the floor layout to simulate loadings from spa baths using Pryda's proprietary software, ***Pryda Build***. For e.g, Acrylic or metal spa baths (without grout bedding) would typically apply a permanent load of 40 kg/sqm and an imposed load of 2.0 kPa over the load area. Note: The base area of the spa would determine the load area. It is important to notify licensed Pryda fabricator of exact spa location, support conditions required by the spa manufacturer, spa model and specifications.

Other Heavy Loads

Where special load cases are to be applied to the floor trusses such as heavy ceramic tiles etc, adopt design charts provided in the Appendix. Or seek advice from your consulting project engineer. Since the project design engineer is responsible for the stability of the structure and all associated primary support members, special heavy loads would need to be considered for such design and therefore the design criteria of any heavy loads should be made available to the licenses Pryda fabricator prior any floor truss design. This should also include any specific support conditions to adequately transfer loads to primary support members.
Heavy loads such as billiard tables, grand piano, large island bench etc, must be considered during quotation period of any truss design as it may impact the final performance of the floor system. Ideally these loads should be clearly identified on structural plans or architectural plans. If in doubt seek advice from a Pryda Design Office.

FACTORS AFFECTING FLOOR PERFORMANCE

Floor liveliness, or bounce, has been an intermittent issue over the years with lightweight residential floors - for all forms of timber and steel construction. To eliminate these problems, Pryda Floor Systems are designed to stringent dynamic performance criteria. The floor truss is only one component that can affect the floor performance. On-site conditions are always important and proper attention to detail must be taken at the time of installation.

Truss Orientation

To ensure the floor performance it is important that all trusses are installed as designed. That is in the correct location, orientation and the right way up. The floor truss layout provided by the authorized Pryda fabricator should be used to position all trusses and the diagrams below used to ensure the trusses are installed the correct way up.

LONGREACH TRUSS END ORIENTATION

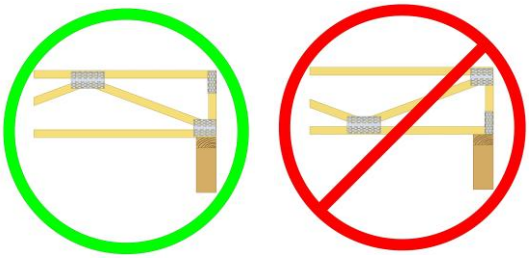

Right Way Up Wrong Way Up

SpaceJoist™

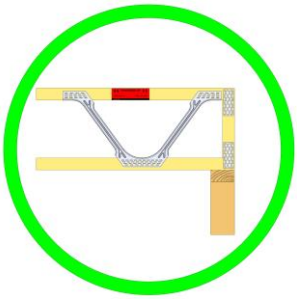

SPACEJOIST™ TRUSS END ORIENTATION

SpaceJoist™ are typically designed having the metal web start from top down for simple support via bottom chord (see image to left). The web orientation will be optimised depending on design criteria, loading conditions, and end type. Within a single project, web orientation may change depending on support condition such as top chord support. Check project layout installation details, truss design sheet to verify or contact truss fabricator if in doubt.
Refer to the 'This Edge Up" sticker or markings on the floor truss for correct orientation. A single project may have different web orientations, so it is crucial to verify the orientation for each truss or group of trusses during installation.

Flooring Material

The flooring material has a significant effect on the perceived bounciness of a floor. It has the ability to spread human impact loads depending on the material and the thickness. Plywood acts differently to particleboard, and T&G acts differently to both. A simple way to improve floor performance is to select flooring that is stiffer (e.g. thicker) than the minimum for your chosen application.

Strongbacks

These are timber members, e.g. 140 x 45mm running at right angles to the trusses. There is generally one row down the centre, but there could be more with larger spans. Their main function is to help the flooring spread footfall impacts to adjacent trusses. They become of greater importance as the spans become larger. It is important that Strongbacks be properly attached to the truss vertical webs as detailed, as poor fixing techniques, such as having large gaps between the Strongback and the web, can reduce the Strongback effectiveness considerably.

Bearing

Trusses must bear directly on their supports and not be held above them by the flooring. This may sound odd, but where the support top plate is not level, and the flooring is nailed to the truss top chord, the flooring itself can lift the lower truss(es) by a few millimetres, and this considerably worsens the perception of floor bounce. This situation is difficult to observe during the early stages of construction and in any Instance of potential floor performance complaint it should be checked using a piece of card to see if there are any gaps between the trusses and their supports. It is important that floor trusses bear over the support wall plate or beam with a minimum of 30mm for residential floors and 40mm for commercial floors. This requirement is implemented to ensure that localised crushing of the top plate or bottom chord does not occur. It also encourages suitable load transference between upper load bearing wall frames and lower wall frames.

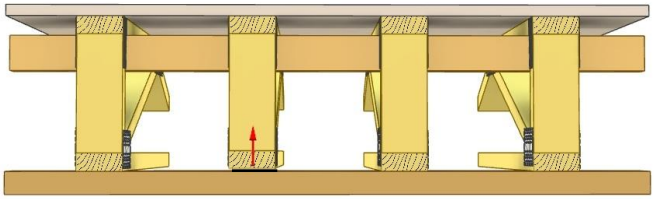

Gap formed by flooring lifting truss over uneven/dipped top plate.

Supporting Beams

If any floor system is supported on beams e.g. steel or timber lintels/beams. The amount of floor bounce in that area can become unacceptable if it is not properly assessed at design time. The dynamics of any supporting beam and the dynamics of the truss must be considered simultaneously as they interact with each other. Each can be satisfactory in its own right, but not satisfactory in combination.

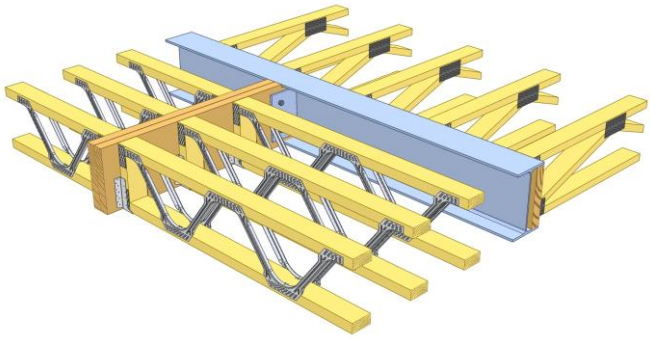

Dynamics of different beam types, floor truss spans and loading conditions shall be assessed simultaneously as a system.

No Ceiling or Suspended Ceiling Underneath Trusses

If there is no ceiling or a suspended ceiling underneath the floor trusses then bottom chord lateral ties will be required (minimum 90 x 45mm SG8). Lateral tie spacing will depend on design and are specified for each project. This will prevent one type of undesirable dynamic response which is otherwise normally prevented by the ceiling (if fixed directly to the truss bottom chords) or ceiling battens. Consideration will also need to be given on how the wind loads on the building will be transferred to bracing walls as once the ceiling is suspended it is no longer capable of providing this function. Seek Engineering advice from the project consulting Engineer specific for each job.

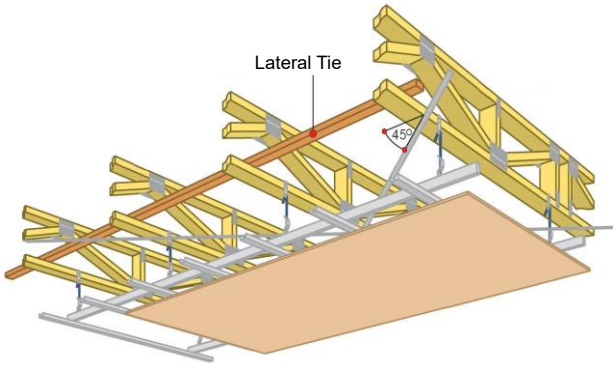

SERVICEABILITY

Serviceability is an important consideration in floor truss design and is often acceptance of a floor system is dictated by its performance under serviceability conditions. Pryda floor trusses are designed for both deflection and dynamic criteria. The deflection limits are based on the recommendations given in AS1720.3 and those suggested in Table C1 of AS/NZS1170.1:2002. As part of the Dynamic performance, to ensure floor trusses are acceptable with regard to 'springiness' or 'bounce', additional criteria are adopted, apart from the ones suggested in the above codes. The natural frequency of the floor system (assuming rigid supports) is determined, and the users of Pryda's proprietary software have the option of nominating three levels of dynamic performance based on the frequencies – **Enhanced** (minimum 10 Hz), **Normal** (8 Hz) and **Minimum** (7 Hz).

Note: *The dynamics of a flooring system are characterised by the perceived frequency of vibration in the floor under a specific load. The rigidity of the supporting structure can have a significant effect on the dynamic performance of the floor system. For example, floor trusses supported by rigid walls will seem to exhibit less bounce than the same trusses supported by flexible beams that allow some level of support movement.*

It is the responsibility of the building designer or engineer carrying out the design of floor beams to consider the effect of them on dynamic performance.

FIRE AND SOUND RESISTANCE

Pryda floor trusses may be used in fire or sound rated construction, in combination with cladding material that is rated to fulfil its function. Fire resistance levels are normally referred to as FRL and are expressed in minutes as 60/60/60 (or similar) to reflect the structural adequacy, integrity and insulation respectively. Sound resistance levels are given in two forms – airborne sound and impact sound. The former is expressed as R_W (weighted sound reduction index) and a value of R_W 50 is typically applied to floors and walls – the higher the number, the better the performance is. The latter is expressed as $L_{n,w}$ (weighted normalised impact sound pressure level). A value of 62 $L_{n,w}$ is common – the lower the number, the floor's impact sound insulation. These fire and sound resistance levels for classes 2, 3 and 9c buildings are given in the Building Code of Australia (BCA). Some manufacturers of cladding material, e.g. CSR Gyprock, Boral Plasterboard, Lafarge Plasterboard etc, have provided technical manuals that illustrate construction technique and assemblies that comply with the BCA "Deem to Comply' provisions. Generic details of construction and typical assemblies incorporating floor trusses may be found in Technical Manual by Forest & Wood Products Australia (FWPA)- "Timber-Framed Construction for Multi-Residential Buildings Classes 2, 3 and 9c.

DURABILITY

Sub-Floor Ventilation

Adherence to the recommendations of the BCA relating to subfloor ventilation is critical to ensure the long-term serviceability of floor trusses that form part of the sub-floor. Clause 3.4.1.2 of the BCA requires that the sub-floor space must be: (a) cleared of all building debris & vegetation; and (b) be cross-ventilated by means of openings; and (c) contain no dead air spaces; and (d) ventilation openings are evenly distributed; and (e) be adequately graded to ensure proper surface water drainage.

Corrosion Protection

Pryda metal webs (Pryda Span floor trusses), and nailplates (Longreach floor trusses) are manufactured using Z275 light-gauge steel, having zinc coating of 275 gsm (total weight). This protection is adequate only for INTERNAL applications in most corrosion environments, unless these INTERNAL areas are classified as Heavy Industrial or subject to high humidity and/or corrosion environments (e.g. enclosed swimming pools) etc. Under these circumstances, seek advice from experts as special protection will be required. *Note: INTERNAL areas are those within the building envelope that are kept permanently dry. All Pryda floor trusses are only suitable for fully sheltered and internal applications.* Some sheltered areas like open sub-floors with no perimeter walls may sustain worse corrosion than fully exposed conditions and therefore is prudent to treat this as an EXTERNAL situation. Accordingly, nailplates or metal webs used in floor trusses within a 'open' sub-floor should have additional corrosion protection. Some alternatives to stainless steel include hot dip galvanised or powder coated steel, which are not supplied by Pryda. For more detailed information, read Pryda's Technical Update on *Corrosion Resistance of Pryda Products* or contact a Pryda office.

Protection of Exposed Cantilever Areas

Cantilevered areas that are exposed to the elements need special attention. An effective and durable barrier must be provided at the outside of external walls to completely prevent moisture penetration into the building.

DETAIL END TYPES

Pryda floor trusses have the advantage of adapting to a range of different on-site support conditions. The dimensions of the 12 standard end types can vary to meet most detailing requirements. The joint details shown in this manual are intended as a guide only. Variations to these may be required and should be verified. The Pryda software includes many End Type detail drawings. Pryda highly recommends that designers select the relevant drawing(s) and add them to the floor truss layout. This is to ensure that the trusses are correctly installed on site. Note on stability: The connection details shown in this section should be verified by the project engineer to ensure lateral stability requirements of the building (and supporting beam) are met.

End Type 1

The most common end type is for bottom chord bearing on wall plate or steel section while also permitting upper wall frame to bear directly above. It may also be used for the connection to framing brackets. *Note:* It is preferrable to use 45mm end webs when fixing into framing brackets.

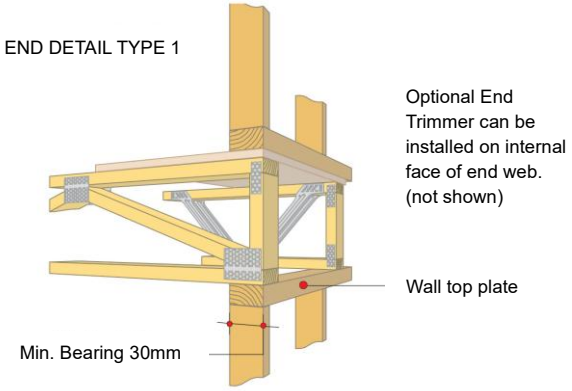

End Type 2

Similar purpose as End Type 1, however permits timber end bracing trimmers to provide lateral stability. It also accommodates minor site variations by allowing the setbacks to be curtailed if need be.

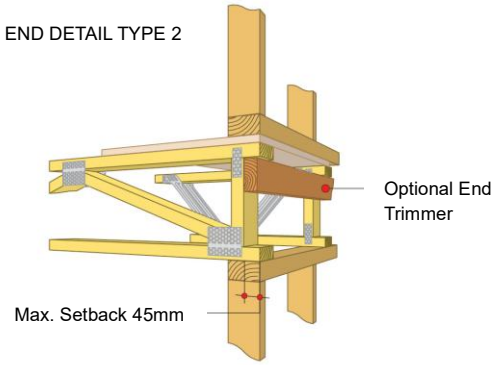

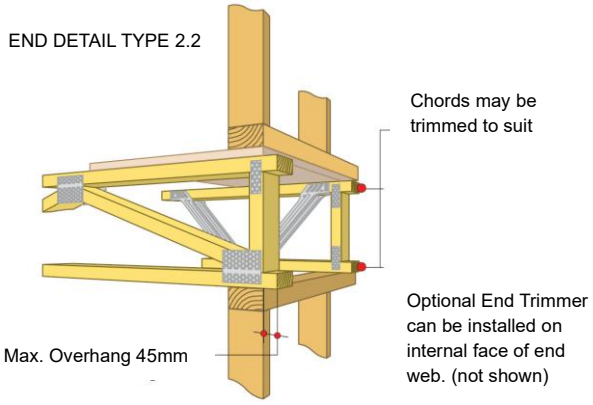

End Type 3

Accommodates ease of installation of timber end bracing trimmers while also supporting upper loadbearing wall frame. It acts as an additional bottom plate and supports the edge of the sheet flooring. End type 3 is the preferred option out of all the bottom chord bearing types, especially when supporting heavily loaded walls. Also refer End Type 6 (with double end-webs).

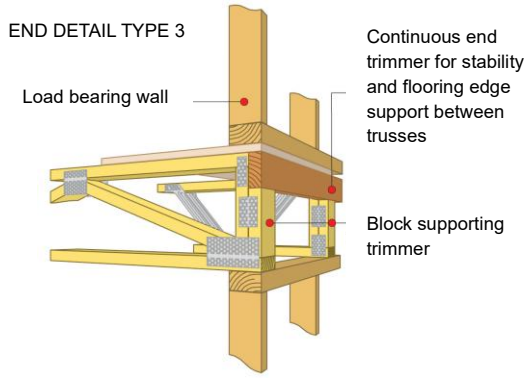

End Type 4

Suitable for bottom chord bearing on the bottom flange of a steel channel or universal beam while also maintaining continuation of the flooring over the top of the steel beam. Ceiling battens may be required to align ceiling, i.e. conceal steel beam.

END DETAIL TYPE 4

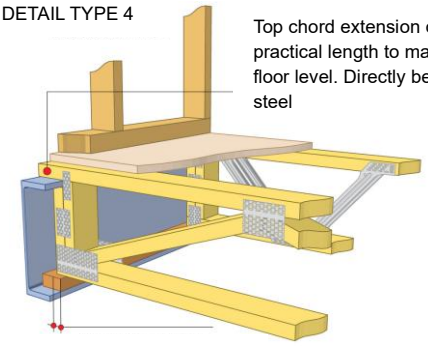

End Type 5

Flexible end type that comprises of a solid block incorporated within the truss nailplate as shown. This block may be cutback at an angle either on site or in the factory to accommodate off-set walls from upper level or facilitate support into steel beams.

Trimmable Ends: When incorporated into end detail design can be especially useful when end supports are not parallel or when the true locations of the support are subject to minor variations. Contact a Pryda Design Office for further advice including information on timber/fixings and the limitations of these applications. In some instances, an I-joist may be used in place of solid blocks.

Alternatively, End Type 5 with a full width end block is suitable for cantilevering over lower storey walls and carrying upper storey load-bearing walls.

As an additional application, the blocking piece may be cut to suit to form pelmets (floor trusses as shown) or box gutters (rafter trusses)

END DETAIL TYPE 5.1
(Trimmable)

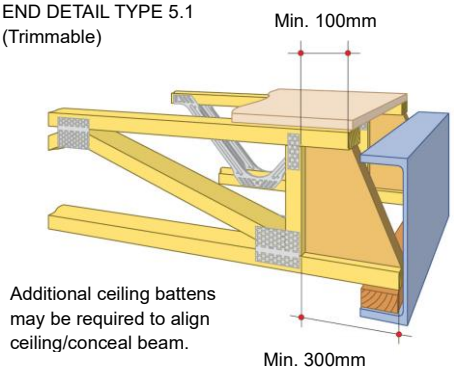

END DETAIL TYPE 5.2
(Cantilever – internal offset)

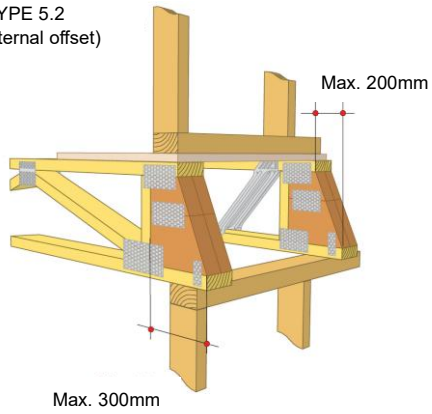

END DETAIL TYPE 5.3
(Cantilever – external offset)

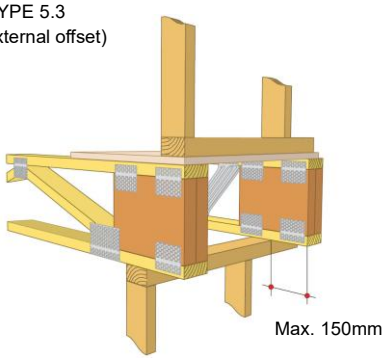

END DETAIL TYPE 5.4
(Pelmets or box gutter when used as rafter truss)

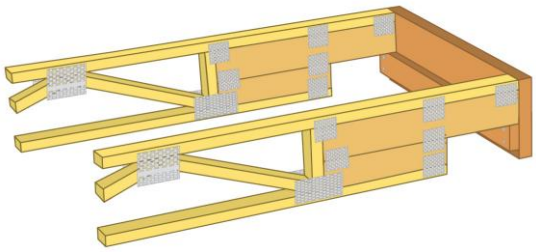

End Type 6

Standard bottom chord bearing with the capacity to transfer high loads from upper load bearing walls. End Type 6 also provides extra timber nailing area when supporting trusses using Pryda Framing Brackets.

END DETAIL TYPE 6.1
(Transfer high loads)

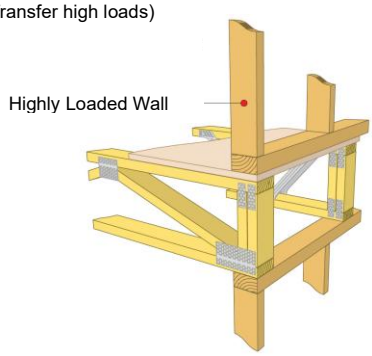

END DETAIL TYPE 6.2
(Pryda Framing Brackets)

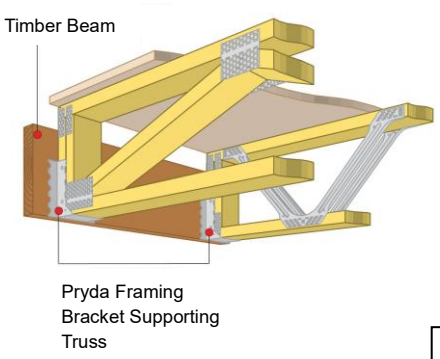

END DETAIL TYPE 6.3
(Steel Beam with timber infill)

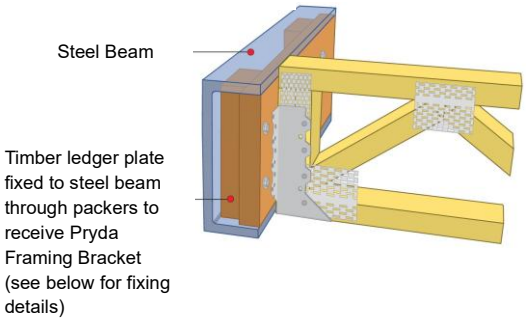

Note:
Timber ledger plate (min. 190 x 45mm) should be fully bearing on bottom flange of steel beam and usually fixed to web of beam through packers at 900mm c/c using 2/M10 bolts. Contact a Project Engineer for verification of fixing for commercial application.

End Type 7

Top chord support on timber floor beam, steel beam or waling plate. Promotes easy installation. It is advised that bottom chord should be restrained (skew nails minimum) to obtain best results.

END DETAIL TYPE 7.1

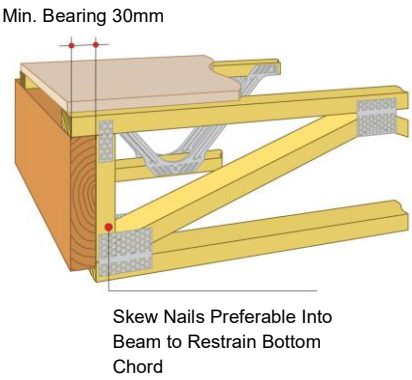

END DETAIL TYPE 7.2

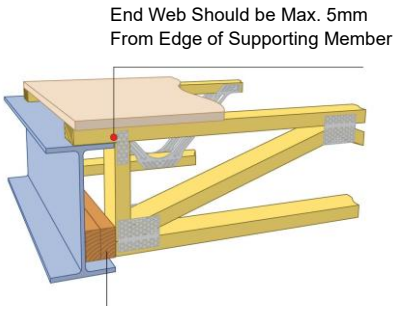

END DETAIL TYPE 7.3

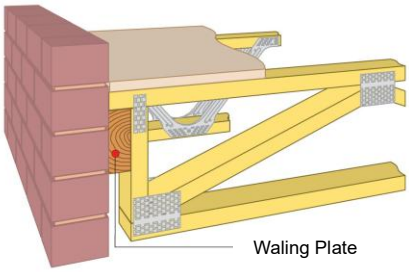

End Type 8

Similar purpose to End Type 7 but permits support member (waling plate/ledger plate) to be concealed at variable depths within the truss.

END DETAIL TYPE 8

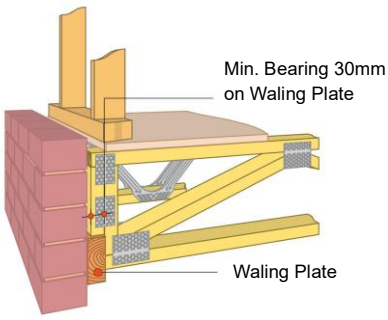

End Type 9

Permits floor trusses to be supported on the top chord while also housing the supporting beam within the depth of the truss. Encourages continuous ceiling lines under trusses.

END DETAIL TYPE 9

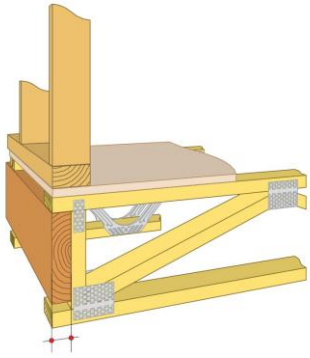

Min. Top chord bearing 30mm

End Type 10

This end type is suitable for short internal cantilevers alongside stair openings.

END DETAIL TYPE 10

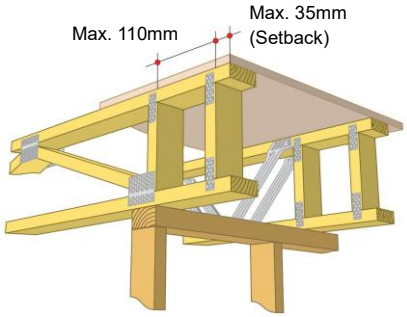

End Type 11

Permits support into steel channels and universal beams while maintaining a floor and ceiling level that finishes flush with the top and bottom flange.

END DETAIL TYPE 11

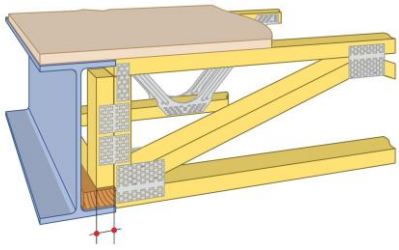

Min. bearing 30mm on primary bearing point

End Type 12

Permits bottom chord support into steel channels and universal beams with the bottom chord finishing flush with the bottom flange while also maintaining a floor level above the top flange.

END DETAIL TYPE 12

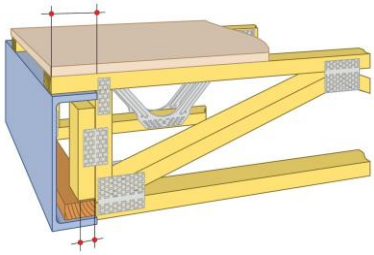

Min. Bearing 30mm on primary bearing point

Combination End Type

A combination of end types may be used to suit site conditions, for internal beams supporting floor trusses from both faces. In the illustration (Combination End Type), floor trusses having End Types 6 and 8 are supported on a steel channel (PFC). Alternatively, directly fixing framing bracket to back face of PFC using approved Tek screws and approved by steel design Engineer can also be achieved.

Combination End Type
(Waling plate/edger plate and infill packer plate)

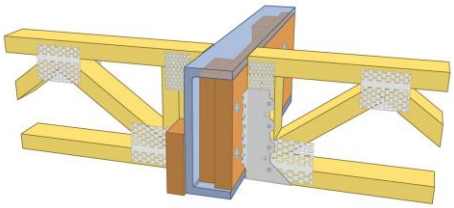

Internal Walls

These details refer to all internal non load bearing and bracing walls for gravity loads. If the floor is to carry load-bearing internal walls, adopt guidelines given on page 10.

Internal non-load bearing Walls - Over Floor Truss

The floor truss system requires no additional stiffening when supporting non-load bearing walls light weight walls, i.e. Walls lined with 10mm plaster board on both sides.

Internal braced walls - Over Floor Truss

Special consideration is required for bracing walls and those carrying wall tiles and other heavy cladding materials. Specifiers should notify the Pryda licensed fabricator of wall loading criteria, bracing positions and capacities.

Bracing Walls Parallel to the Floor Trusses

It is preferable to locate a floor truss directly under a non-load bearing bracing wall, and the supporting truss to be designed for reactions generated by these bracing walls. It is also important to verify the required anchor point fixing requirements can be achieved since typically a floor truss have either 35mm or 45mm deep top chords to connect to. In order for this to happen, the truss designer requires sufficient information on wall bracing of the supporting upper level at the time of the design, in particular the exact locations of bracing walls and the resulting reactions at their anchor points. However, if the floor trusses were designed without any consideration for bracing walls that are supported on the floor above, then the installer is required to take remedial measures on site. For bracing walls having capacities up to 3.0 kN/m, the trusses are required to be fixed as illustrated below for a likely situation where the bracing wall is positioned between two floor trusses. For best practice have trimmers at bracing anchor points and at nominal fixing locations.

REFER TO TECHNICAL UPDATE : BRACING WALL ON FLOOR TRUSS.
BRACING WALL ON FLOOR TRUSSES SHALL COMPLY WITH PRYDA FLOOR TRUSS SUPPORTING BRACE WALL DETAILS. THE WALL BRACE REQUIREMENT SHALL ALSO COMPLY WITH THE BRACING REQUIREMENT AS PER PRODUCT SPECIFICATIONS.

PARALLEL BRACING WALL

Max. Wind Brace Capacity of 3.0 kN/m

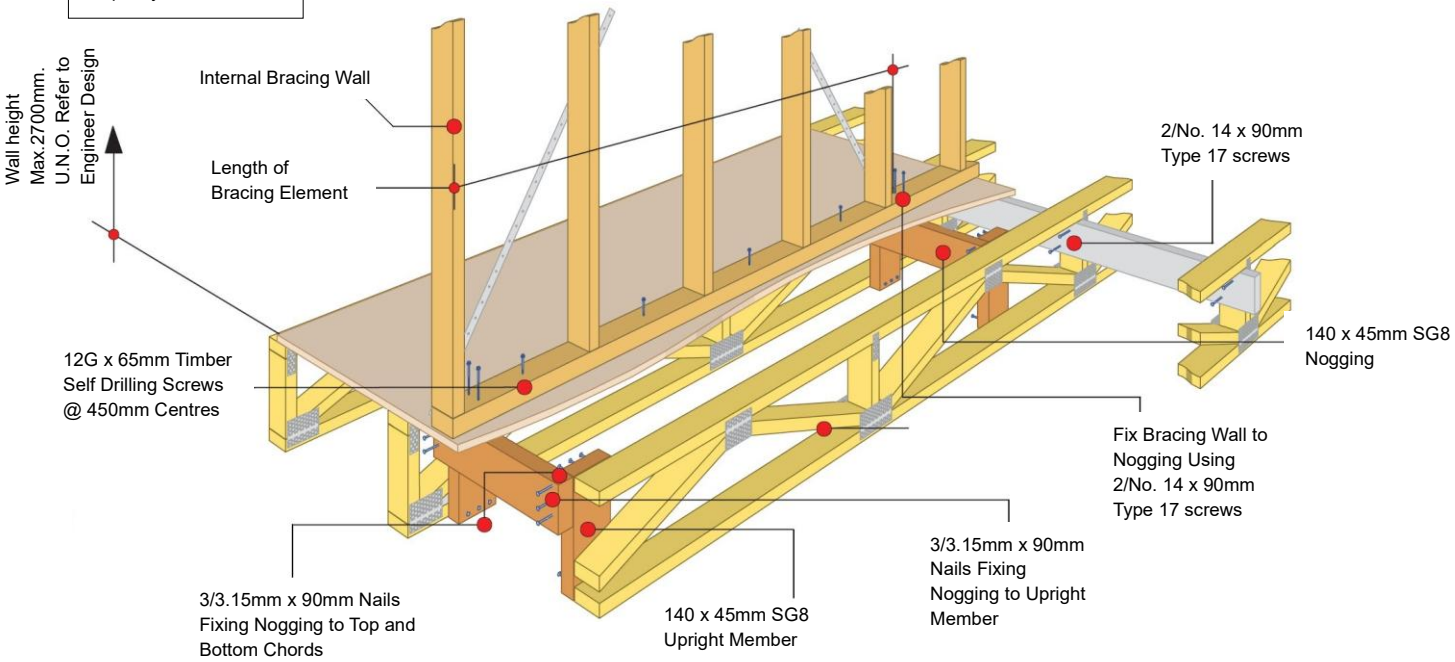

Bracing Walls Perpendicular to Floor Trusses

Again, it is preferable to incorporate the loading from bracing walls at the time of the floor design.

Note on floor trusses supporting bracing walls having capacities greater than 3.0 kN/m: It is prudent to consider these bracing walls at the time of the design as it becomes almost impractical to adequately upgrade truss to suit on site. Contact a Pryda Design Office for further advice.

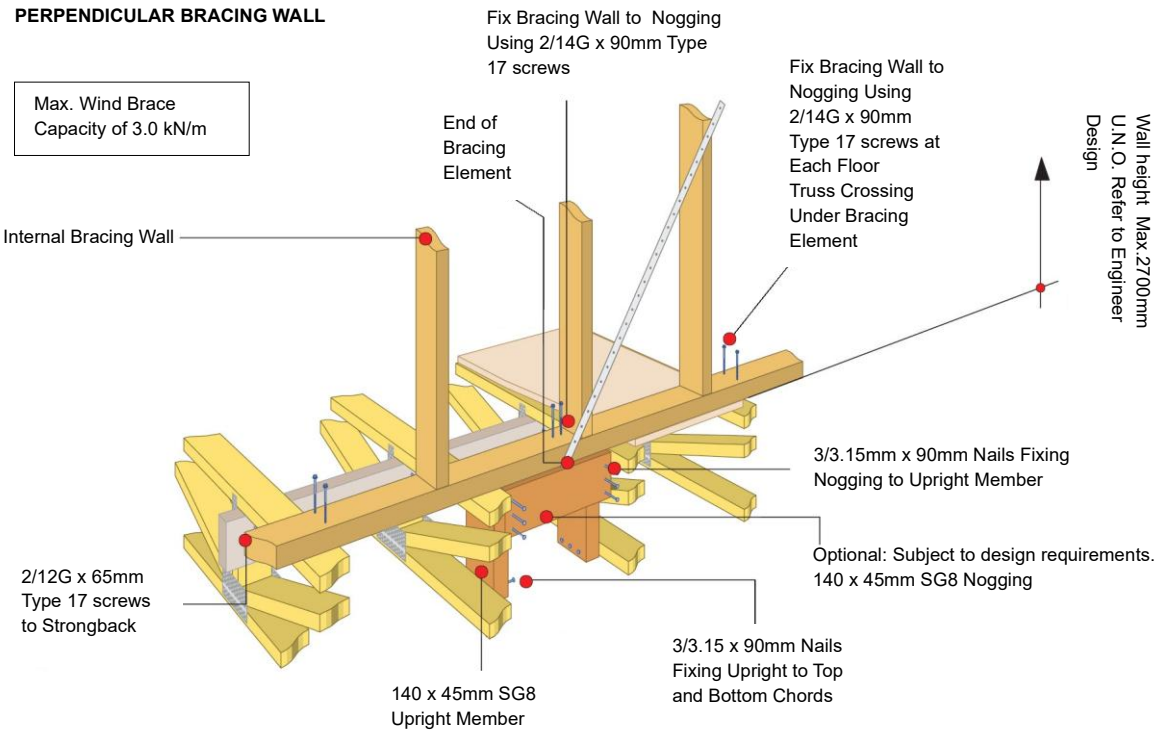

Fitted Flooring

Where a fitted floor is being used, locate a double truss under each wall to provide support to both the wall and flooring. Alternatively, use supplementary ledger plates fixed to the side of the floor trusses.

FITTED FLOOR FIXING - 1

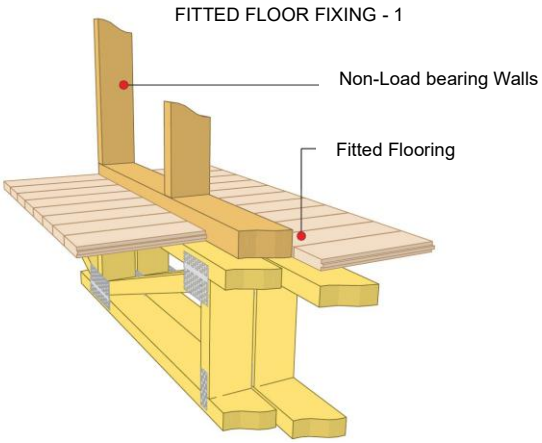

FITTED FLOOR FIXING - 2

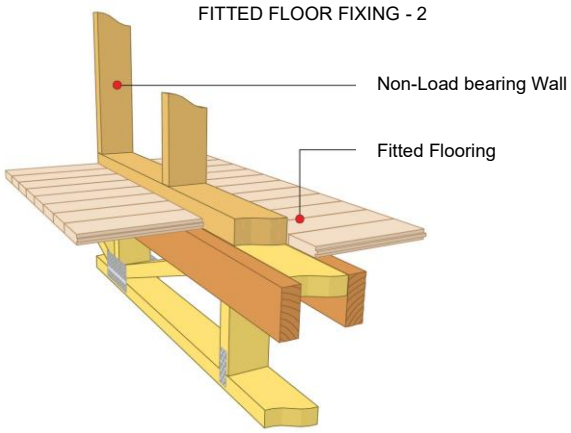

Internal Non-Load Bearing Walls - Under Floor Truss

Floor trusses must be adequately supported on the load bearing supports nominated in the design. There may be a detrimental effect on the walls and the flooring system if the trusses bear on a non-load bearing wall. The tops of internal non-load bearing walls need lateral stabilizing by fixing to the truss bottom chords. The trusses must be allowed to deflect downwards, so Pryda Partition Hitches (product code: MPPHH) and Pryda Internal Wall Screws (product code: IWS) have been developed for this purpose. Refer to MPPHH and IWS product data sheet for more details on Pryda website.

It is important that racking forces generated from stability and wind loads are transferred down through the structure to the foundations. The details below show how these forces can be transferred from the upper floor system, through truss bottom chords to lower storey internal bracing walls. Pryda Shear Connectors (Product Code: PSC) can be used for this purpose.

Walls Parallel

A pair of Pryda Shear Connectors in combination with 90 x 45mm SG8 (min) trimmer fixed with 2/14G x 90mm each end.
Type screws at each truss bottom chord

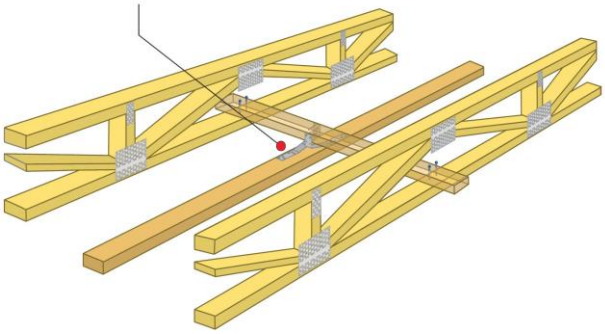

Walls Perpendicular

A pair of Pryda Shear Connectors in combination with 90x45mm SG8 (min.) block (300mm long) fixed to bottom chord with 5 nails

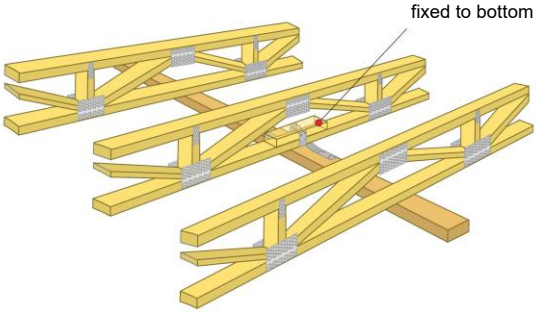

Load Bearing Walls - Under Floor Truss

Important: Should an internal wall be required to support floor trusses, this intention should be made very clear on both the trusses and the truss layout. The supporting structure, footings, etc. should then be designed to cope with the high wall loads that can result. Internal lower storey walls can be used for support to create single length trusses across the width of the building. Alternatively, if the exact location of the support is known, then a vertical web can be detailed at the support point.

Internal Support Types

SINGLE WEB SUPPORT

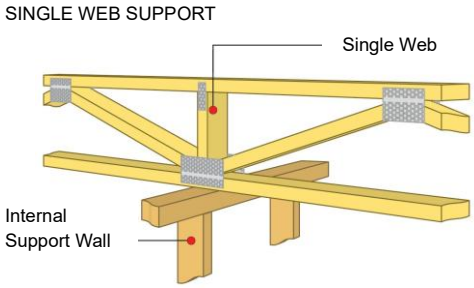

DOUBLED WEB SUPPORT

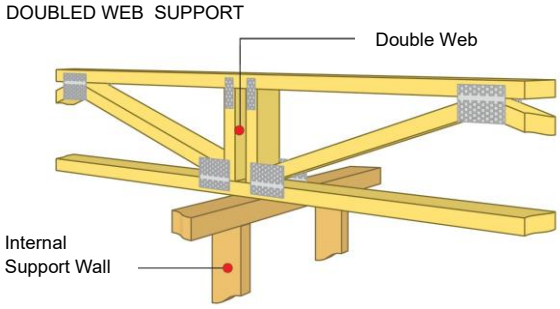

Internal Support Types Continues...

NAILED BLOCK SUPPORT

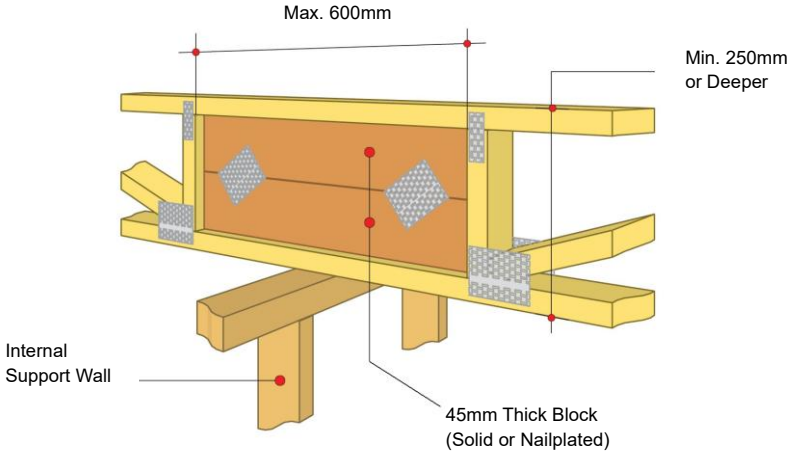

External Walls

These details are for floors that support external walls both load bearing and non-load bearing.

Fully Supported End Truss

Where the end floor truss is supported along its full length by a lower storey wall or by continuous base brickwork or footing while carrying an upper storey wall above, a simplified floor truss, as shown, may be used.

FULLY SUPPORTED END TRUSS

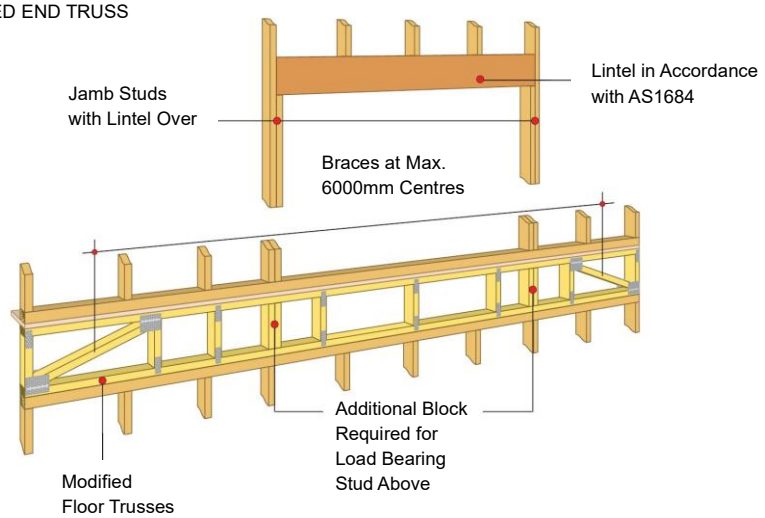

End Truss Under Gable Roof

Where the end floor truss is located under a gable end roof and is fully supported along its length, it is appropriate to use a specifically designed fully supported floor truss. If concentrated loads are made known at the time of design, critical vertical webs can be located directly under concentrated loads. Otherwise, additional blocking can be inserted directly under concentrated loads under critical studs as required on site.

End Truss Carrying Roof Loads Over

Free spanning end floor trusses are required to be designed for both roof and wall loads.
Use guidelines given in page 10 (Loads from External Load Bearing Walls) to compute loads that are required to be applied on the end-floor truss.

Off-Set Load-Bearing Walls

Use guidelines given in page 10 to compute loads from off-set load bearing walls.

Support of Concentrated Loads

Please refer to a Pryda licensed fabricator for an individual design if a floor is to carry a concentrated point load other than as specified below.

- For support of concentrated point loads refer above to the details for “Continuously supported end truss”.
- As specified in detail below

BLOCKING UNDER WALL OR CONCENTRATED LOADS

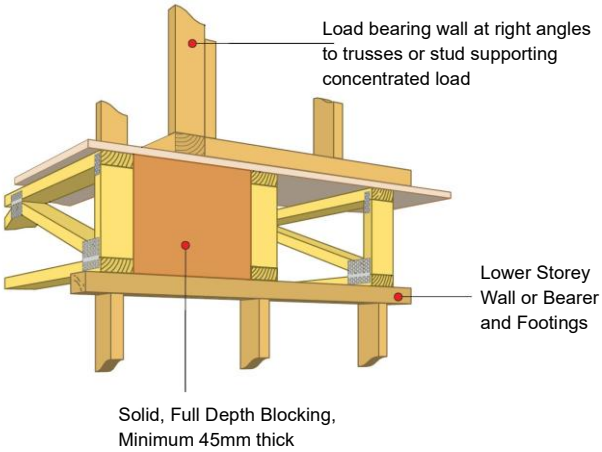

Floor Openings

Pryda floor trusses can be detailed to suit an opening in a floor, e.g. as required to accommodate stairways. A header beam is normally required to support the incoming trusses while a double lamination standard truss is often suitable to carry each end of the header beam. Suitability will depend on design criteria of supported trusses, load areas adjacent to void, and balustrade connection requirements.

FLOOR OPENINGS

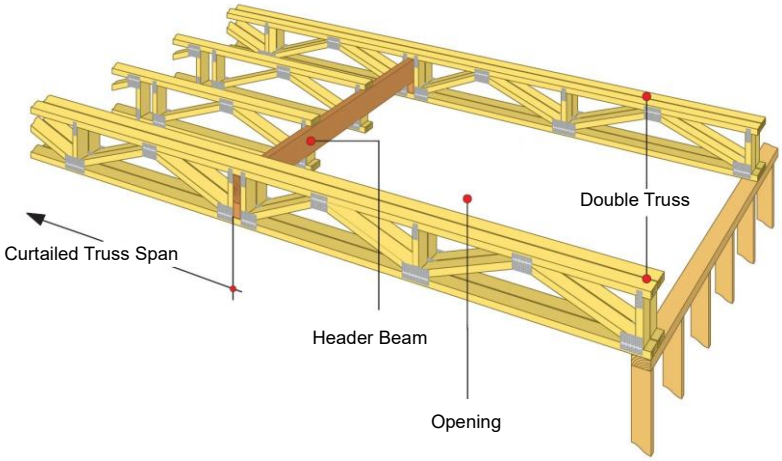

Beam Pocket Detail

The trusses need to be detailed with a beam pocket wide enough to fit the header beam as shown. The header beam should be blocked hard up against the underside of the carrying floor trusses and nailed to each vertical web with 4/3.15 x 75mm nails.

BEAM POCKET

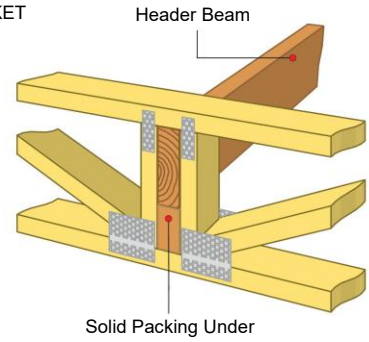

Block Detail

Alternatively, a solid block (600mm long) fixed to the side of the trusses may support the header beam. The header beam may be notched into the solid block or fixed to the block using a Pryda Framing Bracket as shown.

Block Detail 1 – Framing Bracket Support

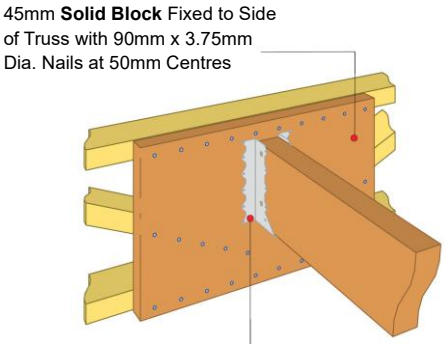

Additional option may include solid block incorporated within the floor truss (as shown below) to receive supported beam.

Block Detail 3 -Integrated Blocking

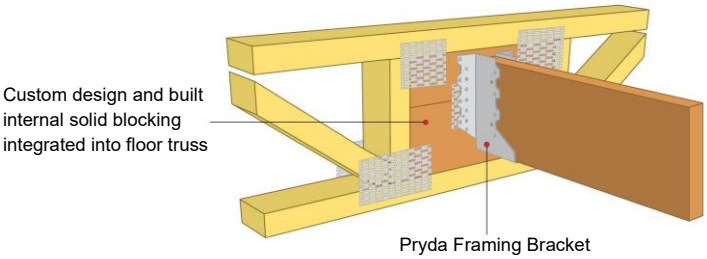

Stairway header beam Parallel/Perpendicular to trusses

The header beam supports the curtailed floor trusses and stair loadings from the upper flight of stairs. Header beam size needs to be specifically designed based on the project loading criteria. Design elements to consider for stairway voids includes :

- Header beam
- Curtailed floor trusses
- Stair landing area
- Stairway (self-supporting) . Seek Engineering clarification.
- Supporting truss - beam pocket and balustrade connection requirements.

Header beam design loads will need to be applied to supporting truss if truss has been used. Before considering using a floor truss as header beam support, consider and review the stairway balustrade connection and ensure using truss will satisfy the required connection details as the connection will typically be fixed through truss top chord 35mm or 45mm depth.

STAIRWAY HEADER BEAM PARALLEL TO TRUSSES - STAIR VOID SUPPORT

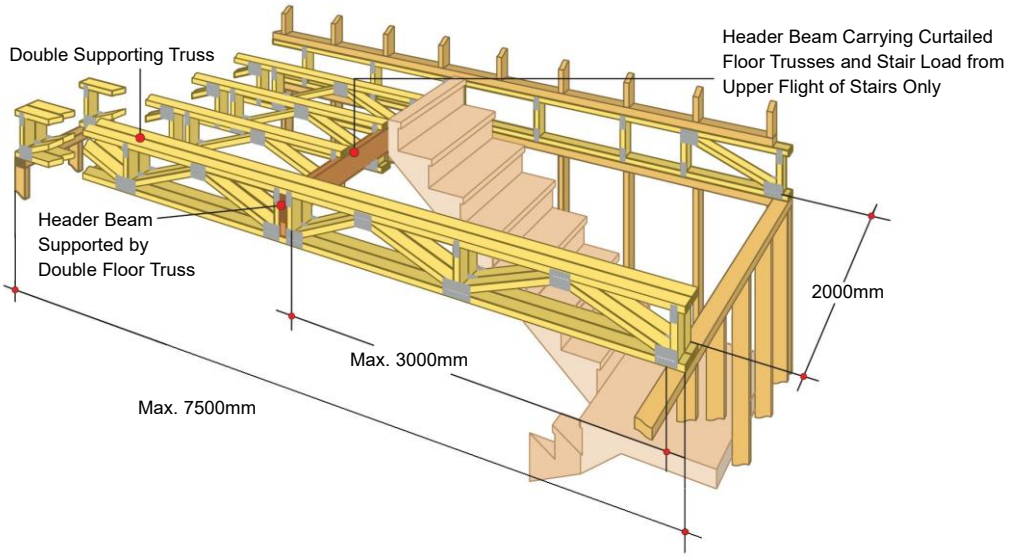

STAIRWAY HEADER BEAM PERPENDICULAR TO TRUSSES - STAIR VOID SUPPORT

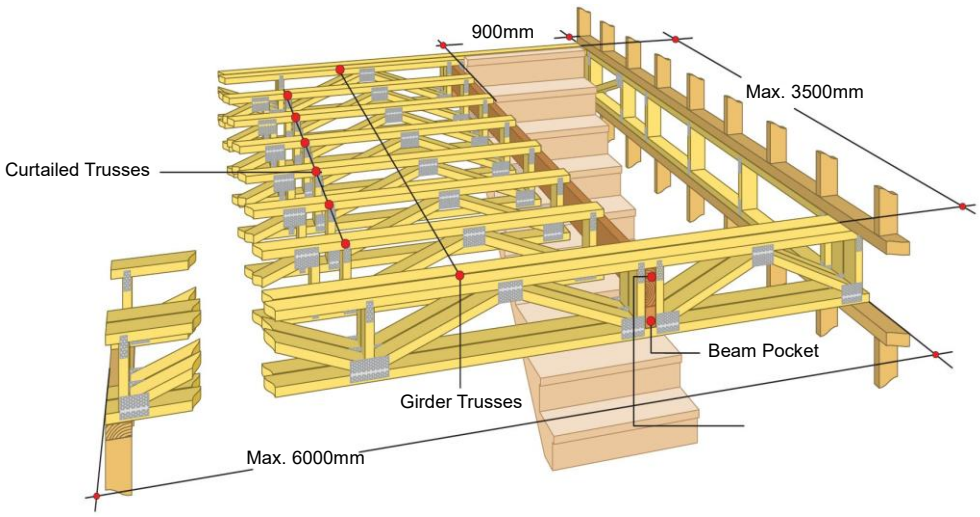

Floor Set Down

The ability to design and manufacture set down sections into the floor trusses provides significant labour savings in the following situations:

- In cantilever and balcony areas where the provision of adequate flashing and accommodation of different floor covering material thicknesses is critical.
- Bathrooms, toilets and other wet areas may also require the floor surface to be set down. This will provide significant labour savings when other trades start installing bathroom fixtures, fittings and tiling.

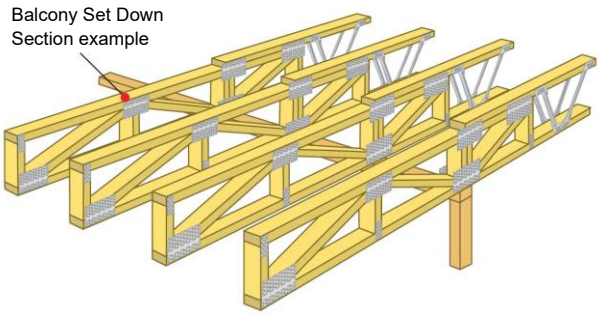

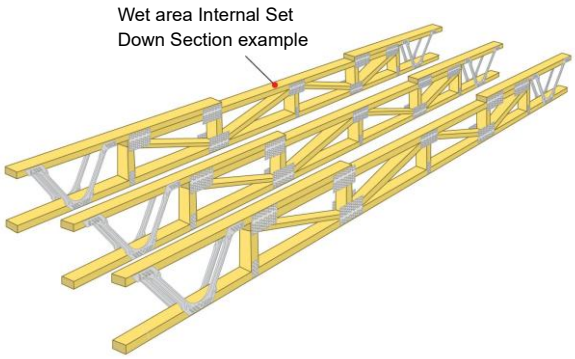

Ducts for Mechanical Services

The open web configuration of Pryda floor trusses permits ductwork and mechanical services to pass through the depth of the truss. Under domestic loads, Pryda Span and Longreach floor trusses may be detailed with voids up to 600mm long near the centre of the span. The span tables show depth clearances and the maximum pipe diameter that can be accommodated without special designs being required.

Pryda Floor software permits duct spaces to be detailed anywhere along the length of the truss, under specific design.

CENTRE GAP FOR MECHANICAL SERVICES

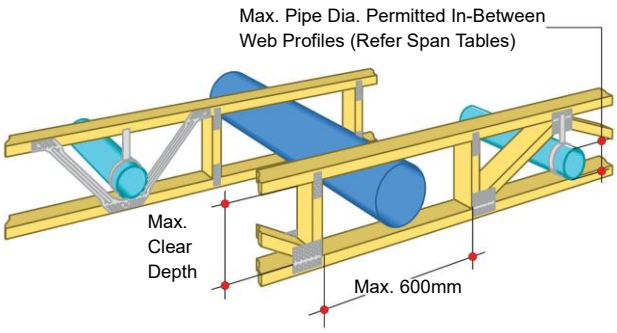

Table 6 –Floor Truss Maximum Duct Space

Floor Truss Maximum Duct Space					
	Truss Reference	Overall Depth with 2x45mm chords (mm)	Maximum round duct diameter (mm)	Maximum rectangular opening	
				Height (mm)	Width (mm)
Longreach Floor Trusses	FT 250	260	130	160	600
	FT 300	310	180	210	600
	FT 350	360	230	260	600
	FT 400	410	280	310	600
SpaceJoist ™	PS 250	260	150	160	600
	PS 30	310	190	220	600
	SJ36045	360	240	270	600
	SJ40045	400	260	310	600

Cantilevers

There are three common types of cantilevered balconies — internal, external, and those which support offset walls above.

Internal Cantilevers

Found in two-storey construction where the first-floor trusses are cantilevered only a small amount as an architectural feature. These cantilevers are built as a simple extension to the truss, with vertical webs introduced at the point of support.

INTERNAL CANTILEVER DETAIL (FIGURE 1)

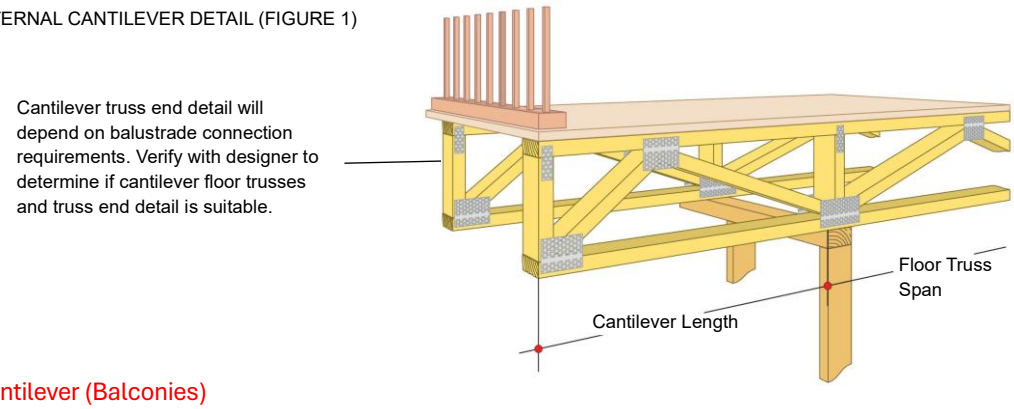

External Cantilever (Balconies)

Floor trusses can be designed and manufactured to include a cantilever for support of fully sealed balconies, generally outside of the building, as shown in Figure 1. Alternatively, a cantilevered timber beam can fix on-site to one side of the truss as shown in Figure 3. The beam size and grade must be determined in accordance with appropriate span tables or software. Figure 2 is only an indicative connection detail, final connection will need to be designed and approved by the consulting project Engineer. This also includes approving the truss details to satisfy the balcony connection requirements and all associated connection,. i.e. balustrade, waterproofing system. At every balustrade post, the truss cantilevers must include a timber block for fixing of the post. The block and fixing must be engineer designed. At the end trusses, 90 x 45mm minimum size stabilizers
must be installed, extending across to the next truss and securely fixed to both trusses with a minimum of 2 x 12G screws, length to suit timber thickness in connection. At the cantilever end, end trimmers must be fixed (as shown in Figure 2) to provide for truss stability and a cover lining to prevent moisture entry.

To ensure the trusses are correctly designed, it is essential that the truss fabricator be advised of the cantilever details, preferably on the building plans. Imposed Actions (live loads) on balconies are higher than those on the general area of the floor. For example, a load of 2.0 kPa is applied on balconies of houses, whereas the general floor load is 1.5 kPa. At the same time, a fully waterproofed tiled balcony floor could have Permanent Actions (dead loads) almost 3 times the standard flooring loads.

CANTILEVERED TRUSS END DETAIL (FIGURE 2)

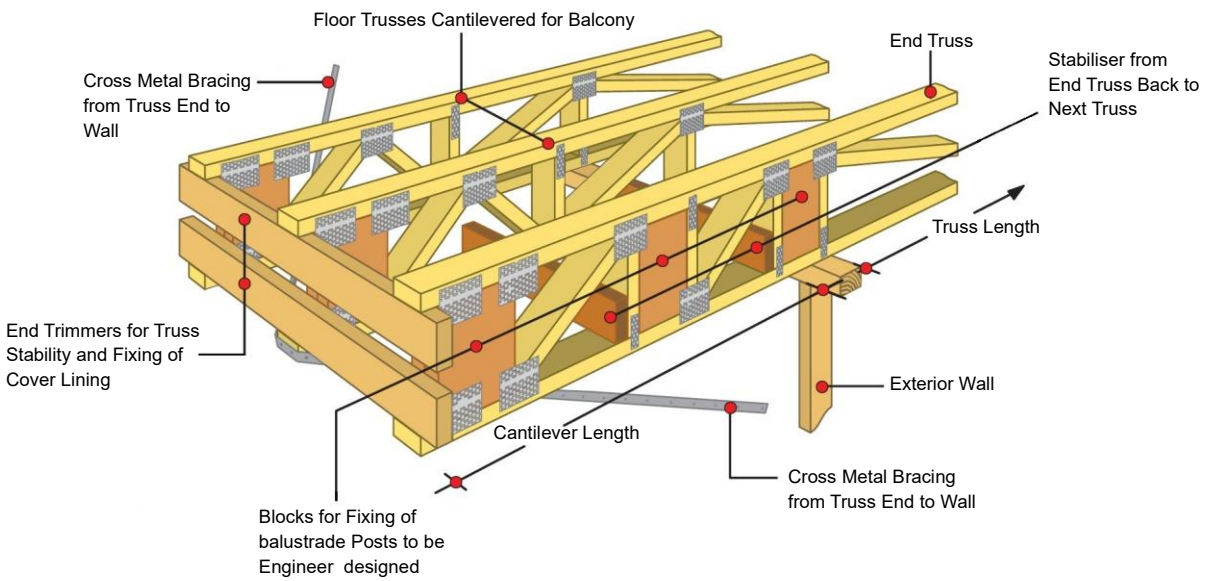

The cantilever balcony beam shall run a similar distance back into the floor truss and at least to the next vertical web past that distance. The cantilever joists are to be fixed to the truss bottom chord and vertical webs with 3.75mm diameter nails (75mm long into 35mm joists and 90mm long into 45mm joists) at maximum 200mm centres. The connection shown is only indicative and needs to be designed according to project requirements. These cantilever details are not intended for cantilevers carrying load bearing walls over. In this instance, refer to a Pryda design office for a special design.

EXTERNAL CANTILEVER (FIGURE 3)

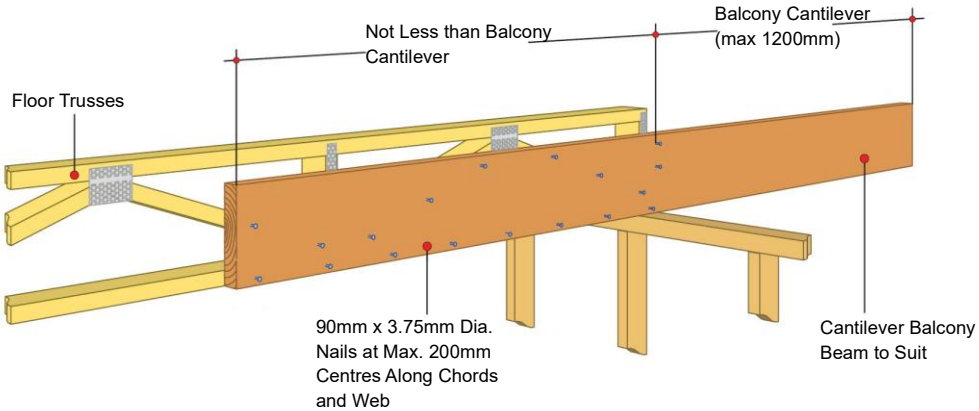

Cantilevered Support of Off-Set Walls

A common cantilever issue encountered is one in which the timber clad second storey frame is offset 150mm outside the lower storey frame. This permits the upper storey external wall cladding to finish flush with the lower storey brickwork. As a result, the floor trusses are cantilevered to support the upper storey roof loads and transfer these down to the foundations via the lower storey walls. Often this issue occurs parallel and perpendicular to the span of the floor trusses.

CANTILEVER – PERPENDICULAR OFF-SET UPPER LOAD BEARING WALL

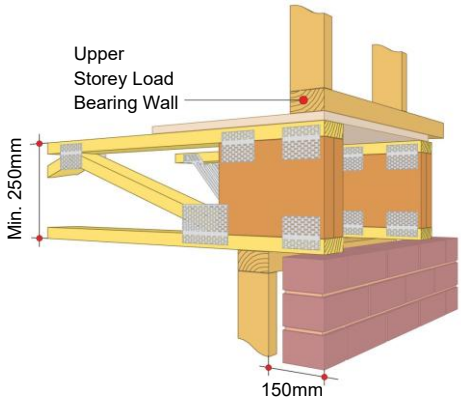

LARGE CANTILEVER - PARALLEL OFF-SET UPPER LOAD BEARING WALL

Fix 'outrigger' truss to pole plate using a Multigrip on each face. Fix pole plate to supporting truss using 3.06 x 90mm nails at 75mm c/c along chord and one additional nail at each crossing vertical web.

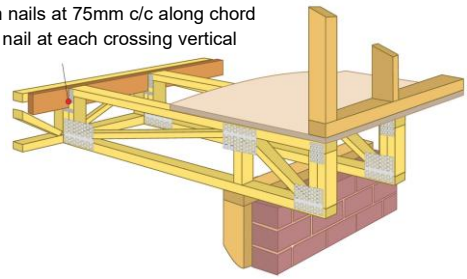

CANTILEVER - PARALLEL OFF-SET UPPER LOAD BEARING WALL

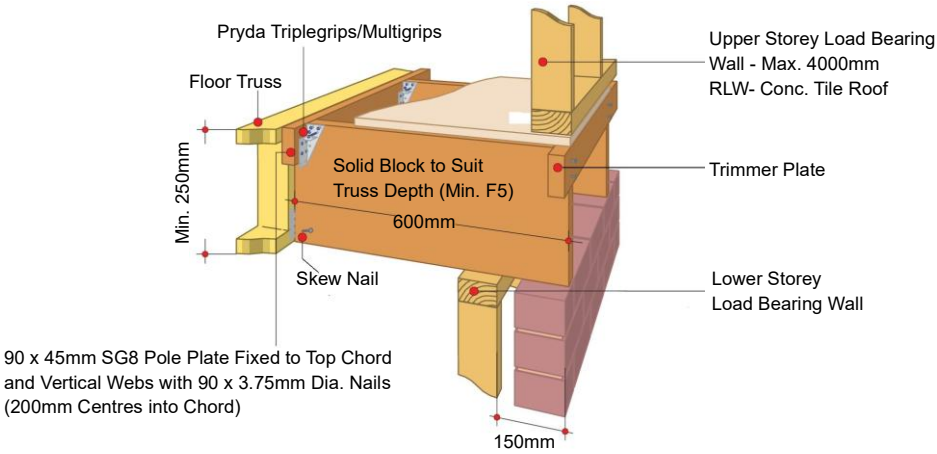

Cantilevered Support of Off-Set Walls Continue...

Outrigger Support of Off-Set Walls. View from inside the building

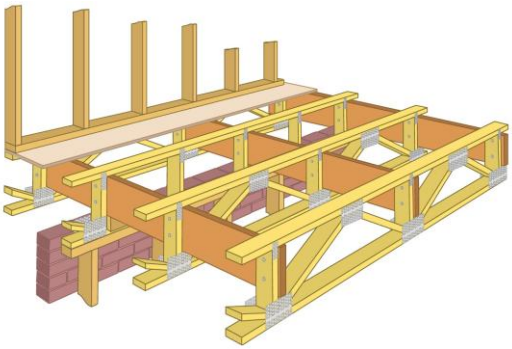

View from inside the building

Outrigger Support of Off-Set Walls. View from outside the building

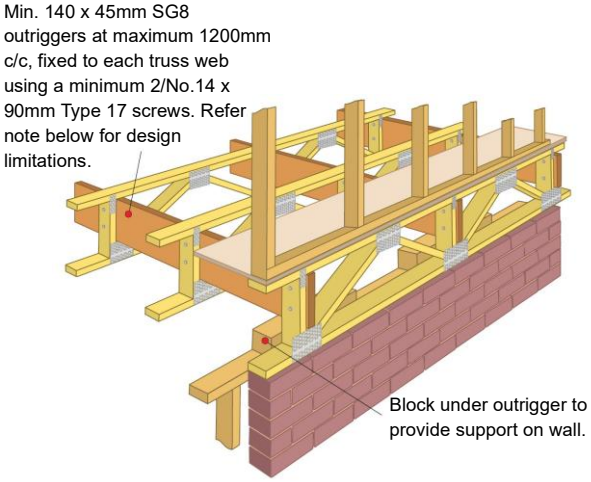

View from outside the building

Strongbacks

Strongback beams run perpendicular to the trusses and are used to spread footfall impact loads to adjacent trusses when required. They are required for specific designs dependent on truss profile, span, depth, and truss timber grade make up. Refer to floor truss layout for Strongback required locations as this will be different for each job.

Strong-Backs are not required for trusses up to 3.5m in span. For trusses 3.5m to 6m span, use one row of Strongbacks located close to midspan. For trusses above 6m span use 3 rows of Strongbacks located one row at midspan, and two further rows located at each of the quarter points.

Strongbacks should be fixed hard up against the vertical web but may be fixed up against the top chord or the bottom chord to suit. Fixings may be hand hammered 90 x 3.75mm nails, or power driven 90 x 2.9mm nails, or No.14 x 90mm Type 17 screws. Screws provide the best performance as they are more rigid, they clamp the timber components together, and they prevent squeaks due to various floor components loosening over time. Where Pryda Span trusses have been used, and there is no vertical web close to the desired location of the Strongback, a supplementary vertical web may be nailed to the side of the truss instead with 2 nails to the top chord and to the bottom chord, to provide a fixing for the Strongback.

LONGREACH STRONGBACK

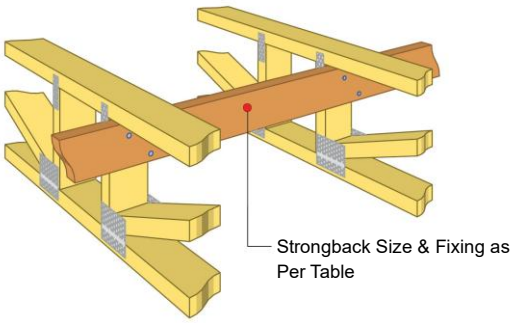

PRYDA SPAN STRONGBACK

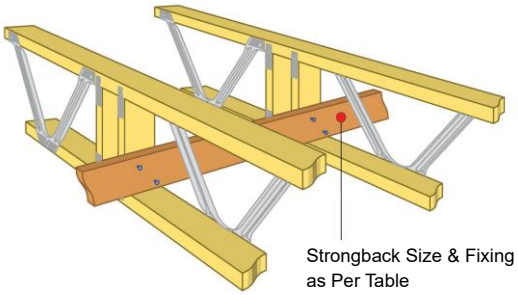

Table 7 – Strong-Back Size and Beam Selection

Nominal truss depth (mm)	Strong-Back depth and grade (all 45mm thick)	No. of fixings per connection
200	90 SG8/SG10 or 70 F17	2/nails or 1/screw
250	120 SG8/SG10 or 90 F17	3/nails or 2/screws
300	140 SG8/SG10 or 120 F17	3/nails or 2/screws
350	140 SG8/SG10 or 120 F17	3/nails or 2/screws
400	140 SG8/SG10 or 120 F17	3/nails or 2/screws
Note: these are minimum recommended sizes only. Larger Strong-Backs may be used in some instances to achieve better floor performances.		

Splice Detail

In locations where the Strongback needs to be joined, either of the following methods may be used:

STRONGBACK SPLICE

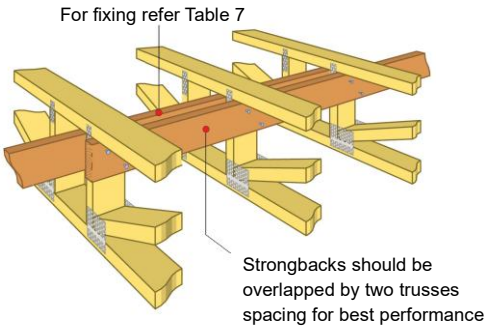

ALTERNATIVE STRONGBACK SPLICE

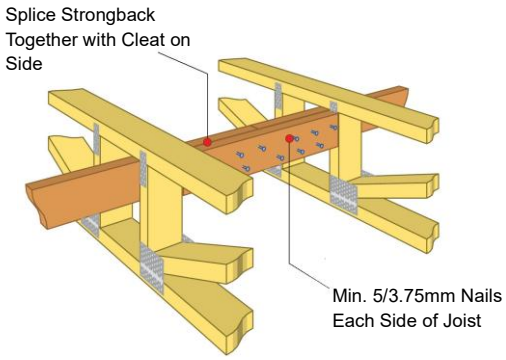

Non-Aligned Strongbacks

In cases where different adjacent spans cause the Strongbacks to be out of alignment, the following detail may be adopted. Vertical blocks of 90 x 45mm are fixed with 2/3.75mm diameter x 90mm nails to both top and bottom chords. Strongbacks are then fixed into the side of the block and the preceding vertical web with the number of nails specified in the table.

Non-Aligned Strongbacks

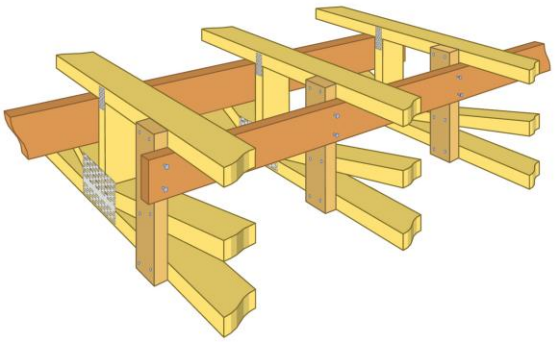

Strongbacks Not Required

Strongbacks may be omitted from floors when:

- The floor has been designed for live load of 3000 Pa or greater.
- Either 25mm F11 plywood, or 2 layers of 19mm plywood (or better) has been used.

In these situations, either the truss will be very stiff due to the high design load, or the flooring itself can dissipate human footfall impacts.

STABILITY

General

Pryda floor trusses must be braced back to their supporting structure for stability in a similar manner to the bracing stipulated by AS1684-2021 for solid deep joists. Use diagonally placed Pryda Strap Brace at 2700mm centres maximum at the ends of trusses and at any internal wall supports. Alternatively, a continuous trimming beam may be used at the end of each truss — see End Type 3 - with diagonal bracing at the end bays only. This bracing may be used as part of a wind bracing system.

Wind Bracing

The wind force on a building must be transmitted through the roof, walls and floors to the footings and ultimately to the foundation. Considering a timber joist or trussed floor, the floor stability bracing or blocking of walls or bearers will help to transmit these forces and may be sufficient to resist the entire wind load. In some instances, the floor stability bracing or blocking may not be sufficient and more bracing is required. It is essential therefore that the building designer, design the additional floor bracing required and that the builder correctly installs this bracing. Consideration should be given to AS1684-2021 Section 8 for more thorough analysis of the interaction between the roof, walls and floors in forming a complete and adequate bracing system. Also considered is the effect of voids on the performance of bracing diaphragms. If in doubt consult your local Pryda design office.

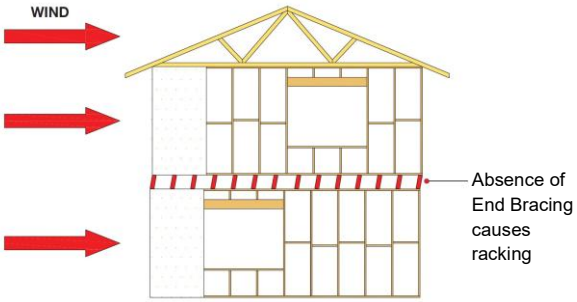

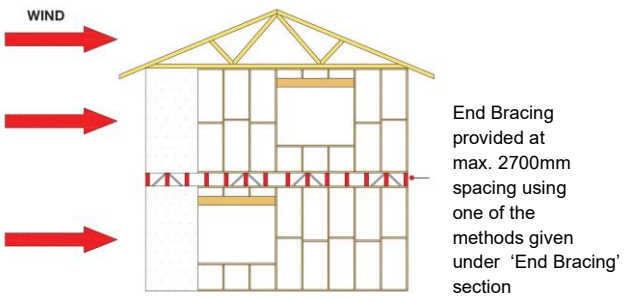

Lateral Bracing of Floor Trusses Chords

Pryda floor trusses are braced laterally at the top chord level by the flooring material and at the bottom chord level by the ceiling lining.
If there is no ceiling fixed directly (or by battens) then 90 x 35mm binders must be provided on the bottom chord designed specifically for the truss span in question. Verify the bottom chord restraint location by referring to the Pryda Truss design header sheets or contact your Pryda Truss fabricator.

End Bracing

Method 1: Strap brace wrapped round wall plate (preferred method)

EXTERNAL BRACING FOR STABILITY AND WIND

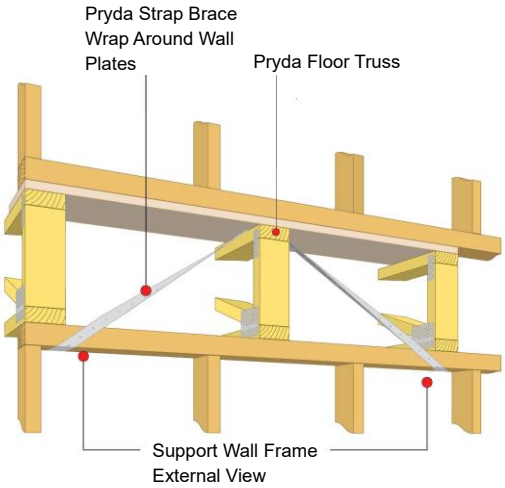

Note: For bracing capacity refer to Table 8

INTERNAL BRACING FOR STABILITY AND WIND

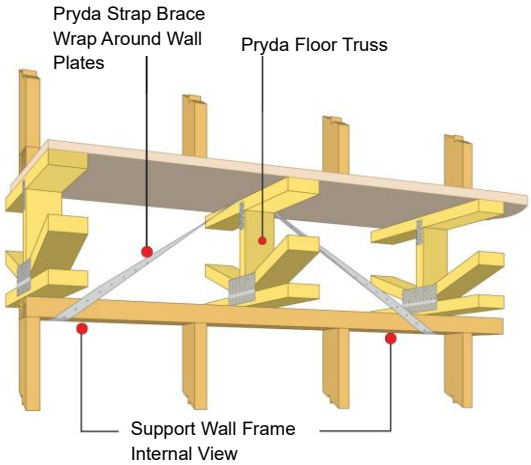

Note: For bracing capacity refer to Table 8

Method 2: Strap brace nailed to side of wall plate

END BRACING FOR STABILITY

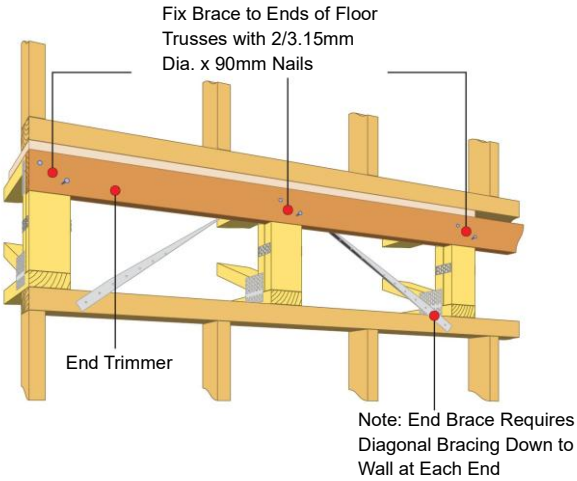

Note: For bracing capacity refer to Table 8.

Table 8 – Bracing Unit Capacity

Pryda Strap Brace Code	Size	Method 1	Method 2
		Fixed to face and wrapped under the plate	Fixed only to face of plate
SB10	25 x 0.8 mm	2.2 kN	1.2 kN

Notes:
Maximum angle of brace to top plate = 45°
Method 1 fixing: 2/3.15 x 35 mm Pryda Timber Connector nails on face of plate and underside of plate.
Method 2 fixing: 2/3.15 x 35 mm Pryda Timber Connector nails on face of plate only.
3/2.3 x 32 mm SHEG Duo-Fast machine driven nails (or equivalent) may be used in place of 2/3.15 x 35 mm Pryda Timber Connector nails.

Product Codes
OSNGB = 3.15 x 35 mm Pryda Timber Connector nails
D40810 = 2.3 x 32 mm SHEG Duo-Fast machine driven nail

Bracing Walls Supported by Cantilever

The ends of cantilevered trusses or beams supporting (over lying) bracing walls require bracing with diagonal metal bracing back to the (under lying) supporting wall frame refer to detail below. Bracing to be fixed in accordance with recommendations of AS4440-2004. Include detail/table of how much bracing is required given different bracing capacities of “bracing” wall over.

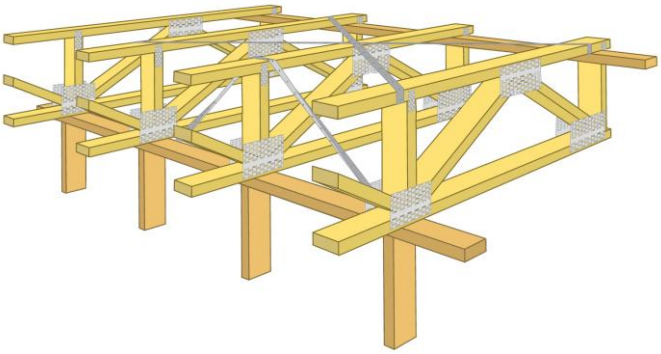

Fixings at Supports

Each truss shall be held onto its supporting plate/bearer by a minimum of 2/75 x 3.15mm diameter nails if preferred a better fixing may be achieved by using one Pryda Minigrip (Product Code: MG5) with 3/35 x 3.15mm diameter Pryda Timber Connector Nails per tab.

When supporting trusses on steel or timber beams via top chords it is preferable to restrain the bottom chord using skew nails while the top chord should be fixed to the supporting beam using screws or Pryda Triplegrips. This practice improves the stiffness of the floor by minimizing movement and vibration at the supports.

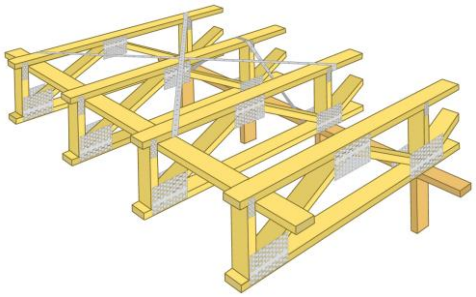

TYPICAL BEAM SUPPORT FIXING OPTION 1

TYPICAL PLATE SUPPORT FIXING

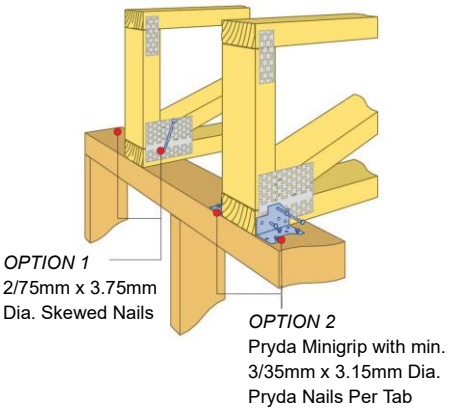

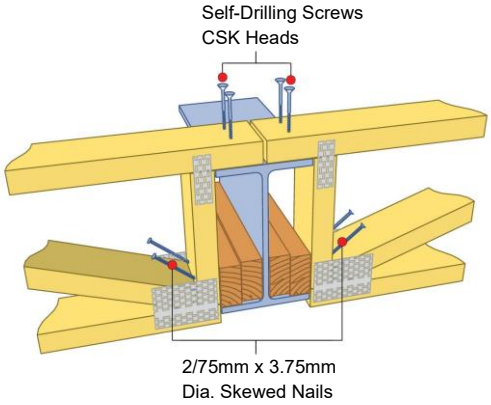

Face Fixing of Floor Trusses Domestic Floors

Trusses can be supported on loadbearing walls or from the face of beams or bearers using Pryda FBF94153 Framing Brackets (for 90mm trusses) or Pryda FBF74163 Framing Brackets (for 70mm trusses). For timber, fix bracket to the supporting member with 35 x 3.15mm diameter Pryda Timber Connector Nails or No.12 x 35mm diameter Timber Connector Screws. These brackets are capable of carrying support reactions (dead+floor live) in excess of 9.0 kN, using a total of 18 nails or 6 screws in JD4 timber. For fixing to steel, replace the the No.12 timber screws with 12G Buildex Series 500 screws. It is important to verify with steel beam designer before directly fixing face mounted brackets to steel face. The following tables provide maximum spans that Pryda Framing Brackets are capable of supporting.

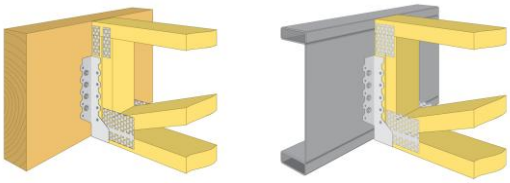

Floor Truss Framing Brackets and Fixings

Table 9 – Design Capacities per Framing Bracket

Framing Bracket Code	Fixing to Supporting Beam (Beam A)	1.2G+1.5Qf (Dead +Floor Live Load) Design Capacity ΦNj (kN) for Joint Group:			Fixing to Supported Beam (Beam B) mm	WIND UPLIFT K1 = 1.14 JOINT GROUP		
		JD5	JD4	JD3		JD5	JD4	JD3
FBF74163/FBF94153	18 Nails	7.3	8.7	12.2	10 nails	6.9	8.2	11.6
	10 screws	9.6	13.6	19.2	10 screws	16	20	20
	6 screws	6.1	8.6	12.3	6 screws	10.1	14.4	20

Note: For more detail refer to Framing Bracket for Floor Trusses Data Sheet at www.pryda.co.nz

INSTALLATION

For more specific information relating to good site practice and workmanship refer to AS4440-2004 and the Pryda Floor Truss Installation Guide however consideration should be given to the following:

- Documentation for site
- Temporary storage
- Transportation to site
- Protection from the weather
- Modification of trusses and manufactured components
- Lifting
- Delivery to site
- Installation
- Connection and fixing details
- Clearances

Particular attention is to be given to the proper stacking of material during the construction stage. It is best to be avoided if possible however if in doubt contact Pryda for advice.

Construction Loads

Attention is to be given when temporarily stacking materials on floor trusses during construction. Important points to consider:

- Ensure trusses and their supports are fully braced prior to stacking materials.
- Materials should be stacked in such a way that the loading is distributed over as many trusses as possible. It is preferable to position sheets with the long edge perpendicular to the trusses (see figure below). The maximum depth of pack (particleboard, plasterboard etc) should be limited to not more than 150 kg/m^2. Refer to Pryda Floor Truss Installation Guide July 2026 for more information.
- Try to stack materials close to a support, if not at least away from mid-span of trusses.
- If materials are stacked parallel to trusses (not the preference), ensure five sets of bearers are used to distribute loads. Also, the stack depth should be maintained at a maximum 300mm.
- Safeguard trusses from impact loads – trusses can get damaged when loads are dropped on them, even if the load is small.

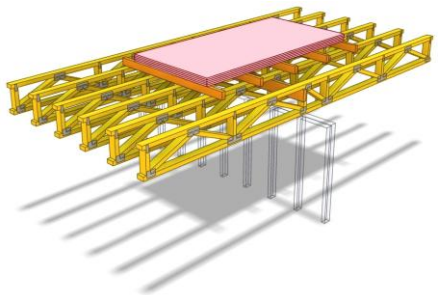

Stacking of material parallel to trusses

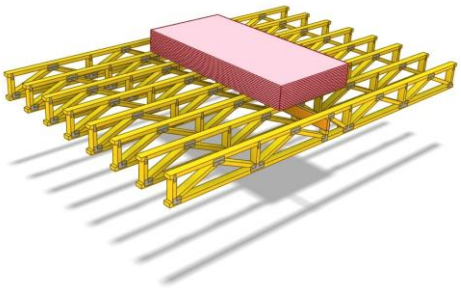

Stacking of material perpendicular to trusses

PRYDA RAFTER TRUSS SYSTEM

INTRODUCTION

Pryda Longreach and Pryda SpaceJoist™ trusses are also available for use as part of the Pryda Roof Truss System. The design and manufacturing principles use similar standards to the floor trusses and therefore the benefits associated with Longreach and Pryda SpaceJoist™ can also be attained in roof construction. Longreach and Pryda SpaceJoist™ trusses are suitable as roof purlins or rafters for all roof materials. Pryda roof trusses are generally made to order with special fixing requirements for stability and tie-down against wind uplift. There are two types of roof truss designs covered in this guide – Purlin trusses and Rafter trusses. The criteria for overall height, clear height and construction are the same as for floor trusses.

For detailed information refer to Appendix F

Purlin Trusses

Purlin trusses run parallel to the ridge and are perpendicular to the plane of the roof. The steel sheeting is fixed directly to the top of the chord, and a ceiling is assumed to be attached directly (or with battens) to the bottom chord.

Rafter Trusses

Rafter trusses are often laid horizontally (like floor trusses) and are overlaid with graded purlins which provide a fall to the roofing material. However, a small pitch may also be given to the rafter trusses with battens overlaid in the normal manner. The steel sheeting is fixed to the purlins, and a ceiling is assumed to be attached directly (or with battens) to the bottom chord. Note: For design specifications outside the scope of these tables (e.g. cyclonic wind zones) contact your nearest Pryda design office.

PRODUCT BENEFITS

Pryda Longreach or Pryda Span trusses are lightweight and easy to handle compared to solid purlins/rafters, and this is an advantage when lifting into hard-to-get roof positions. Longreach can be manufactured to any depth to meet height restrictions or match existing roof features.
The open web truss profile allows mechanical services to pass through while special duct spaces may be incorporated into the profile for larger service pipes and ducts.
Pryda trusses can be manufactured to suit any on-site configuration using the numerous truss end-type details. They may also be designed to incorporate box gutters.
Pryda roof trusses are manufactured in 70mm and 90mm wide timber which improves resistance to buckling under wind loads and reduces the number of required lateral restraints to the bottom chord.
In the same manner as floor trusses, the Pryda Roof System eliminates uneven ceiling levels or complex ceiling support systems and allows a consistent depth throughout the job.

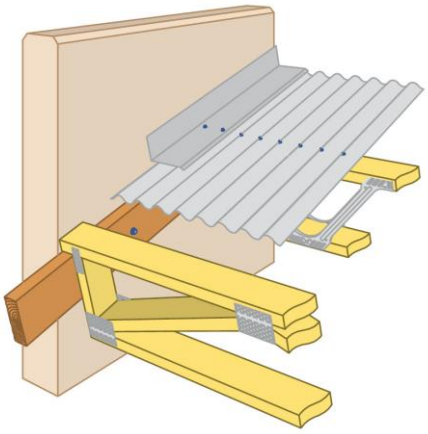

DESIGN CONSIDERATIONS

Design Loads

Permanent Actions (Dead Loads)

Permanent loads which are considered during the design process include:

- Self-weight of truss
- Roof material (sheet steel, slate, tile, battens etc)
- Ceiling material (plasterboard, battens)

Imposed Actions (Live Loads)

Live loads are those associated with non-trafficable roofs and are the result of stacked materials or equipment used in repair and maintenance operations. The minimum imposed actions for roofs stipulated in AS1170.1-2002 is 0.25 kPa on the plan projection of the roof. However, for structures other than houses, this load will increase when the area supported by the truss is less than 14 sqm. The design also considers the concentrated load of a single person standing on the cladding.

Wind Actions (Wind Loads)

For houses, wind actions are usually obtained from the designated site classifications for the location of the structure and based on NZS 3604:2011 Timber-Framed Buildings. For all other Buildings outside the standard's geometric limits, wind actions are calculated in accordance with AS1170.2.

Ducts for Mechanical Services

The span tables list the clear depth between chords if a duct space is made available within the web profile, while also indicating the maximum pipe diameter that may be passed through the webs. Refer to Table 8.

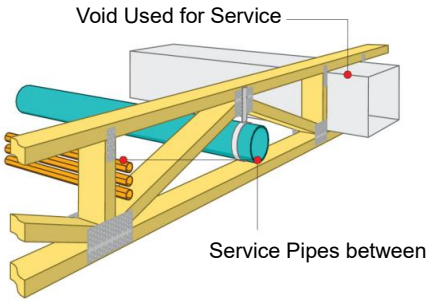

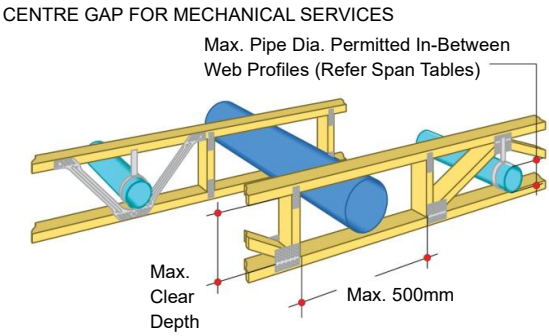

FACTORS AFFECTING PERFORMANCE

The performance of Pryda Rafter Trusses may be limited by a number of factors including deflection under dead load and timber strength capacity under a dead, live or wind actions case.

Deflection Limits

Longreach and Pryda SpaceJoist™ Rafter Trusses are designed according to deflection limits set out in AS/NZS 1170. Deflection limits may be nominated for individual projects by the design Engineer. Following are some acceptable limits but always verify for project specific design requirements.

Load Condition	Max. Deflection Ratio
Permanent Action	span/300
Imposed Action	span/300
Wind Action	span/150

Special Loading Conditions

Air conditioning units and other mechanical equipment can add significant loads to rafter trusses. The introduction of an increased truss spacing to incorporate a skylight will also produce a special loading condition. The truss fabricator should be informed of these conditions to accommodate special designs.

STABILITY

Top Chord Bracing

The forces generated by resistance to buckling of the top chord and wind loading perpendicular to the span of the trusses must also be transferred back to the supporting structure by steel braces. It is required that Pryda Speed Brace or Strap Brace be applied to the top chord in conjunction with adequately spaced roof battens in accordance with AS4440-2004: Installation of Nail-Plated Timber Roof Trusses. The steel brace shall be continuous over the ends of the trusses and be anchored down to the top plate.

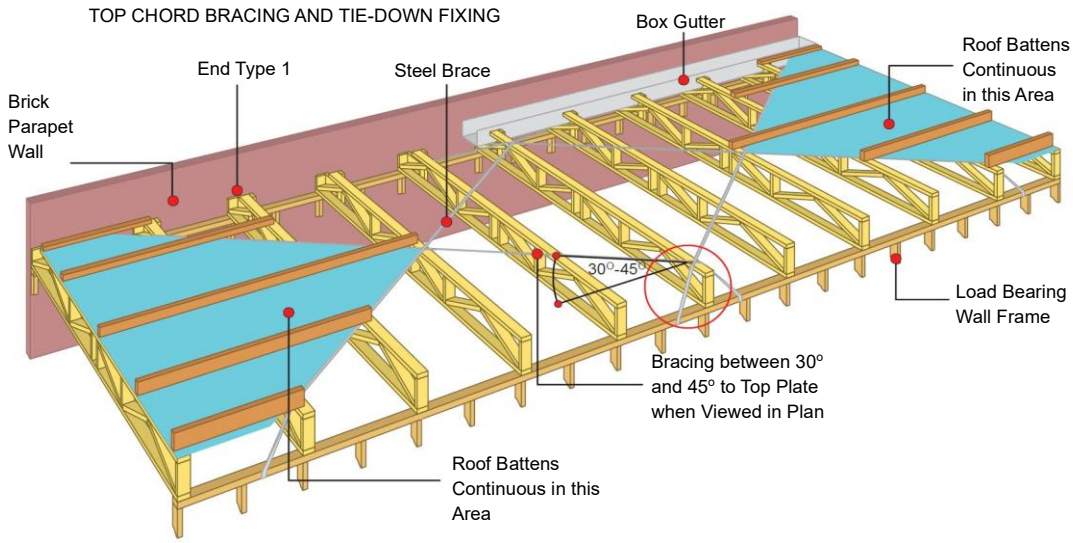

Bottom Chord Bracing

Strongbacks are not required for Longreach or Pryda Span roof trusses. For suspended ceilings, or exposed bottom chords, or where ceiling battens do not provide restraint to bottom chords under wind uplift conditions, it is required that bottom chord ties are introduced in accordance with AS4440-2004: Installation of Nailplated Timber Roof Trusses. In addition to this, Pryda Speed or Strap Braces shall be fixed to the truss bottom chords to transfer bracing loads back to the supporting structure according to AS4440-2004: Installation of Nailplated Timber Roof Trusses. In circumstances where the ceiling material and battens do provide effective restraint then bottom chord ties shall not be required.

BRACING REQUIREMENTS FOR SUSPENDED CEILINGS AND UNRESTRAINED BOTTOM CHORDS

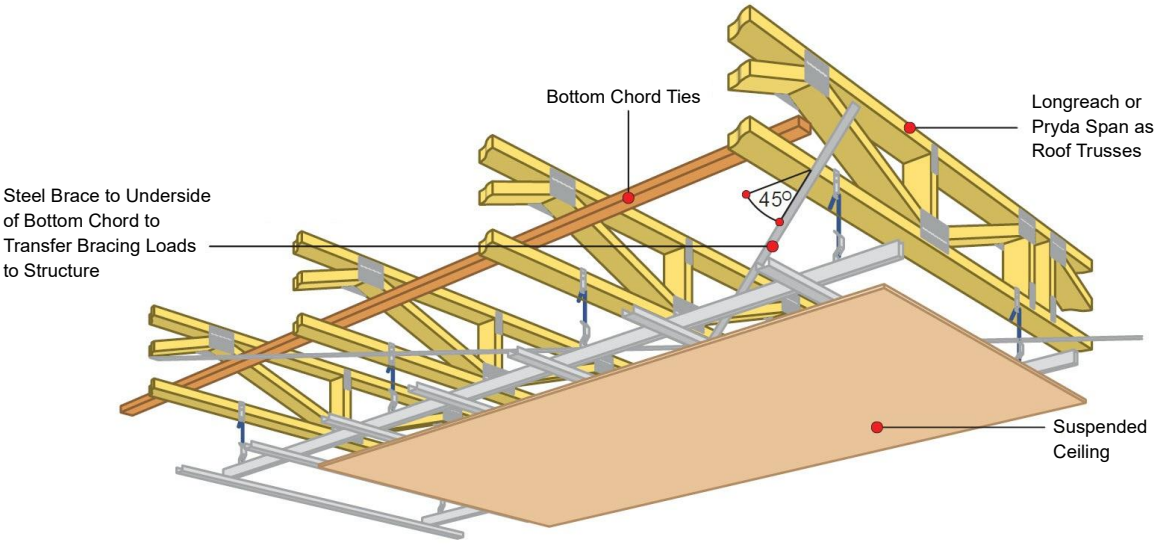

Note: Refer NZS 3604 Section 10 for Further Guidance on Bottom Chord Restraint Requirements or Pryda floor bracing documents.

Cantilever Bracing

Cantilever Bracing Details of Pryda Rafter Truss Systems is as for Pryda Floor Truss Systems.

Fixing to Supports

Pryda rafter trusses must be fixed down to the supporting structure using connections that match or exceed the magnitude of the wind uplift forces on each truss. Each truss shall be held onto its supporting plate/bearer by a minimum of 2/75 x 3.06mm skew nails, or one Pryda Minigrip (Product Code: MGS) or Multigrip (Product Code: MG) with 3/35 x 3.15mm nails per tab. Refer to AS1684-2021 for further guidance on fixings and tie down requirements. Pryda Rafter Trusses shall also be braced laterally at the ends of the trusses using Pryda Strap Brace at each end of a run of trusses.

END BRACING AND TIE-DOWN FIXING

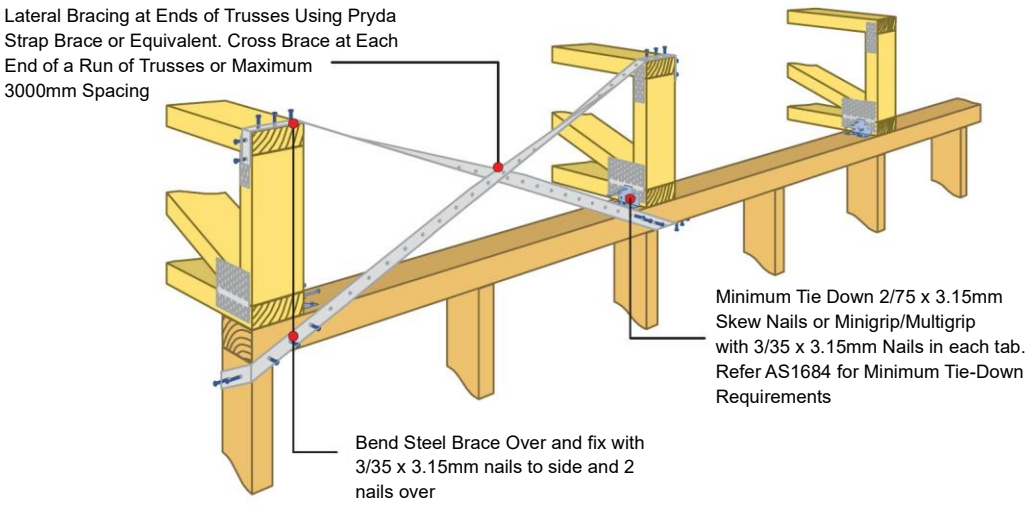

APPENDICES

Appendix A: Producer Statement

Pryda Australia
A division of ITW Australia Pty Ltd

Page 1

Date:

Producer Statement

Job Ref:

Floor Truss Design Criteria For Building Permit Application

Client Name:

Site Details:

Nominal Design Criteria:

Building Importance:	Residential
Flooring:	22mm particieboard
Ceiling:	10mm plasterboard
Top chord restraints:	300 mm
Bottom chord restraints:	600 mm
Standard truss spacing:	600 mm
Nominal Floor live loads:	1.50 kPa 1.80 kN
Floor performance:	Nominal

Note: Ceiling lining must be fixed to the bottom chords of trusses with nails or screws at maximum 600mm centres.

The truss designs for this job have been determined using computer software provided by Pryda Australia, using sound and widely accepted engineering principles. In particular, loadings and designs and are performed in accordance with the Standards adopted by primary reference in the National Construction Code (NCC xxxx), Volume One, A1.3 and Volume Two, Part 1.4.

In addition, the following secondary referenced Australian Standards also apply:

AS 1649- xxxx Timber - Methods of test for mechanical fasteners and connectors - Basic working loads and characteristic strengths

AS 1684.1- xxxx Residential timber - framed construction, Part 1, Design Criteria

All trusses shall be manufactured in accordance with the fabrication specifications provided by Pryda, and installed, connected and braced in accordance with the recommendations given in - : Pryda's Guide to Installation and any other supplementary details that may be provided.

Name: _____ Position: _____

Signed: _____ Date: _____

Pryda Australia
A division of ITW Australia Pty Ltd

Page 2

Date:

Producer Statement

Job Ref:

Client Name:

Site Details:

Truss Data	***Chords***		***Webs***	
Truss Type:	Floor 1. 45MGP10 JD5		Metal PW30	
Oall Height:	300 2. 35MGP10 JD5		u.o.n. 35MGP10	JD5
Thickness:	70			
Spacing:	600			
TC Restraint:	300			
Timber Group:	Pine & KD			
Building Importance:	Residential			
Flooring Material:	22mm particleboard	14.8kg		
Plus Specified: 3.00kg/sq.m				
Ceiling Material:	10mm plasterboard	7.2kg		
Live Load:	1.50 kPa; 1.8 kW			

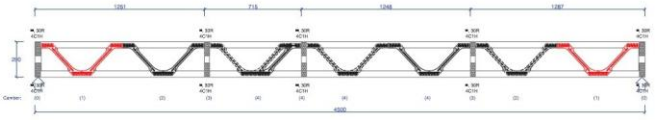

Truss Mark FT1 > 1 Single Truss

Appendix B: Typical Layout

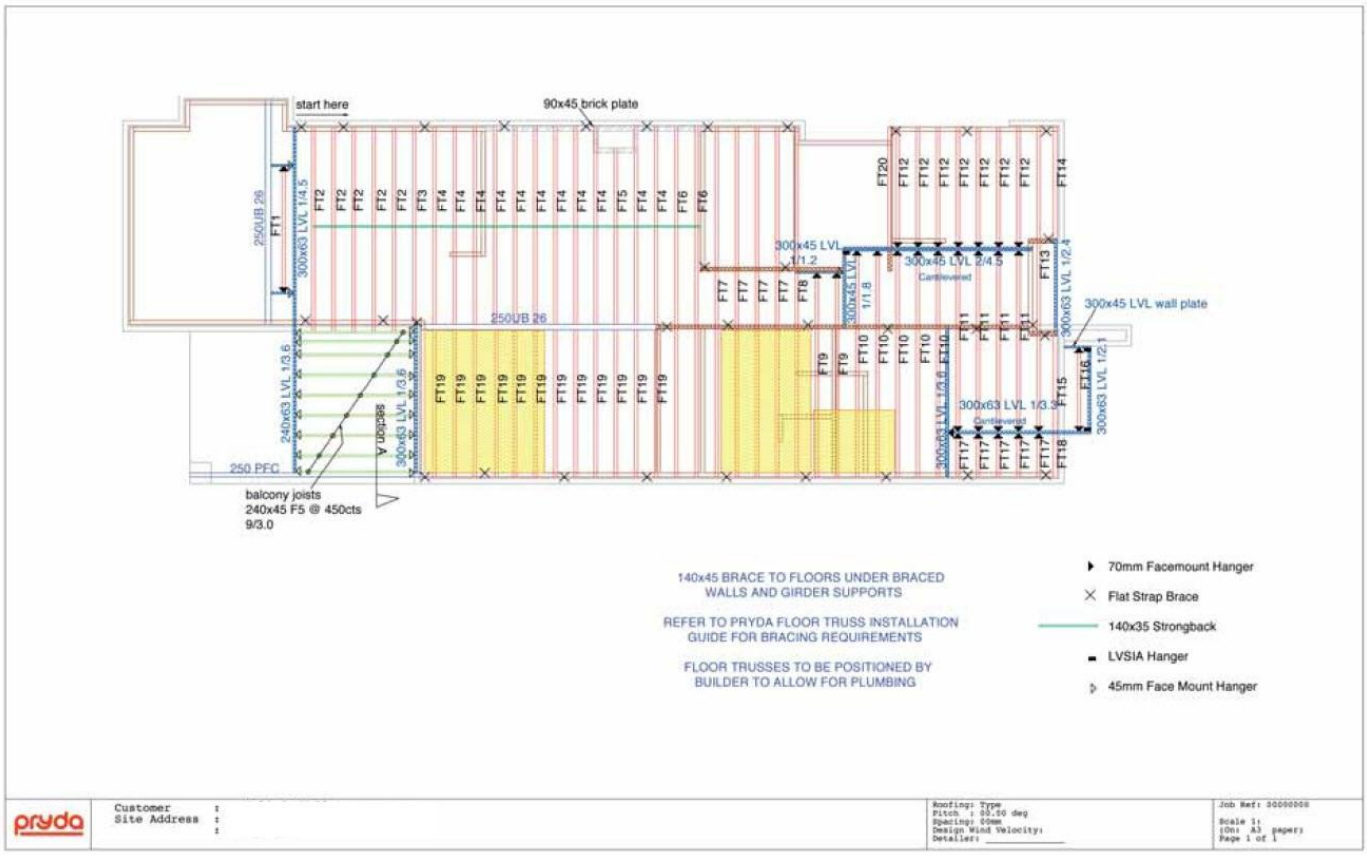

Appendix C: Detailers Guide / Check List

This is intended to be used as a basic guide only, if in doubt contact an authorised Pryda fabricator or the engineering Department of Pryda Australia

1. Confirm the imposed actions (floor live loads) -uniformly distributed load (kPa) and concentrated load (kN). This is particularly important for commercial jobs
2. Confirm the floor finishes i.e. floor recess in wet areas, shower base, etc.
3. Confirm any additional loads:
   (a) Kitchen - island benches, stone bench tops etc.
   (b) Wet areas - floor tiles, wall tiles, large baths, spa baths, vanities etc.
   (c) Storage units, bookshelves, water beds, pianos, billiard tables etc.
4. Ensure flooring material is adequate to satisfy applied live loads and truss spacing. Note: Generally, a warning message will pop-up in Pryda Build if the selected flooring material is not suitable.
5. Trusses under walls with wall tiles should be considered
6. Trusses supporting load bearing walls:
   (a) For walls spanning across trusses– ensure a Critical Vertical Web is provided at this location and the correct point loads are applied.
   (b) For walls spanning along a truss- ensure correct point loads are applied at every panel point. Double trusses may be considered to satisfy serviceability requirements.
7. A more stringent serviceability requirement may be considered for brittle surfaces such as stone and tiles.
8. Determine location of all critical plumbing services, i.e. toilets, shower drains etc. and ensures trusses are detailed (web profile, truss spacing etc.) to accommodate these service pipes.
9. Waling plate design and connections to support trusses must be designed by builder's Consulting Engineer. Seek advice if in doubt. Do not assume nominal fixing of waling plates without considering how the loads are supported.
10. Dynamic performance (spring and bounce) is likely to be increased when floor trusses/joists are supported on structural beams. This aspect must be given consideration.
11. Screw fixing of Strongbacks to vertical webs is recommended for more consistent performance. Nail fixed Strongbacks should be tight fitting with no gaps in the connection to the vertical webs.
12. Strongback splice location and methods of connection should be highlighted to ensure correct installation.
13. Solid block or continuous trimmer is to be provided under all concentrated point loads, i.e. jam studs supporting loadbearing lintels and studs supporting concentrated loads.
14. Simplify and rationalize floor truss connections to supporting beams to reduce the risk of errors during installation.
15. Continuous span floor truss will behave much better than single span trusses. When a situation arises where an existing continuous span truss
1. is required to be trimmed back, check the remaining single span for adequate performance. Don't assume the remaining single span will perform correctly.
16. Unless specifically required for a particular layout the Pryda Build default should be set to "Force diagonal web at Gap" for better truss performance.
17. Floor trusses used in external decking/balcony situations must be fully sealed and made 100% waterproof. If this cannot be achieved then avoid using floor trusses in these areas and substitute with solid joists with the appropriate grade of durability. This should be addressed at the quotation stage.
18. Under no circumstance shall the builder or installer be allowed to modify floor trusses or their connections without prior approval from truss designer or Pryda Engineers.

Appendix D: Design Request Form

Design Request Form

Contact Details

Name		
Address		
Email		
Phone/Fax		

Site details

Address	
Email	
Phone/Fax	

Design Criteria

Building type	Residential		Commercial		Essential services		Isolated	
Floor performance	Normal		Enhanced		Minimum			
Support types	Masonry		Timber frame		Beams			
Roof material								
Roof pitch								
Roof overhang								
Ceiling material (Upper)								
Flooring material								
Ceiling material (Lower)								
Truss spans								
Floor depth								
Floor cantilever								
Set Down areas								
Exposure to the weather								
Other considerations								

To locate your preferred Pryda fabricator for quotations go to **www.pryda.com.au**
For technical queries please contact Pryda Australia on **1800 810 741**